RAPID-AIR

OPERATING INSTRUCTIONS FOR RS50, RSA1500, RSA2500, RSA4000, RSA6000 DUAL SWIVEL REELS

RAPID-AIR
4601 KISHWAUKEE ST.
ROCKFORD, IL. 61109-2925
PHONE: (815) 397-2578
FAX: (815) 398-3887
WEB SITE: www.rapidair.com

TABLE OF CONTENTS

PAGE

RS56, RS58 DUAL SWIVEL

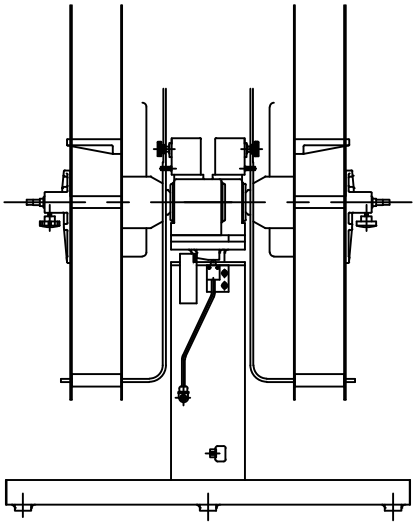

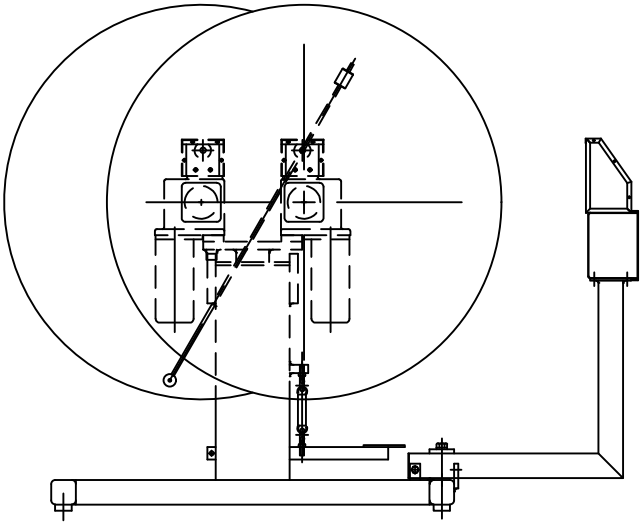

MODEL	MAX. COIL DIA.	MAX. COIL WEIGHT	MOTOR HP
RS56	36"	500 lbs.	1/2
RS58	48"	500 lbs.	1/2

Electrical requirements:
120vac, 60hz, 20 amp outlet

RSA1500, RSA2500, RSA4000, RSA6000

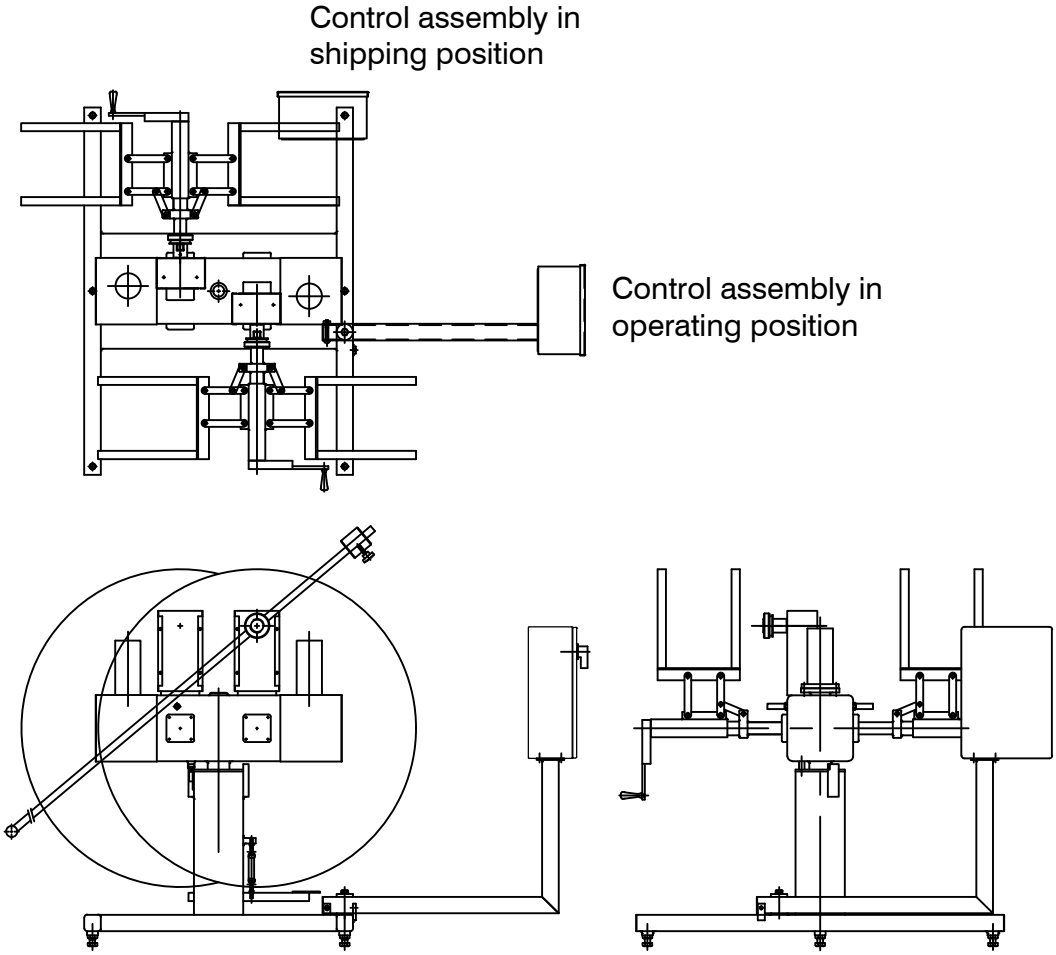

MODEL	MAX. COIL DIA.	MAX. COIL WEIGHT	MOTOR HP
RSA1500	48"	1500 lbs.	1/2
RSA2500	60"	2500 lbs.	1
RSA4000	60"	4000 lbs.	1 1/2
RSA6000	72"	6000 lbs.	2

NOTE:
HP LISTED ARE FOR STANDARD UNITS

Electrical requirements:

Up to 1 hp	120vac, 60hz, 20 amp outlet
1-1/2 hp	230vac, 60hz, 12 amp
2 hp	230vac, 60hz, 15 amp
3 hp	230vac, 1ph, 60hz, 25 amp

INSTALLATION

1. With the exception of the dancer arm assembly (on some models) your stock reel is fully assembled and ready to be put into position. Visually inspect unit for damaged or loose parts due to shipment. If there is physical damage, consult carrier. To install dancer assembly, see step 3 below.

2. Install reel on level surface with sufficient clearance for loading and unloading coils. For safe operation secure unit to the floor. Loosen bolt that holds control assembly in shipping position, rotate control assembly 90°, use removed bolt to lock control assembly in operating position.

3. Your unit is shipped as standard with material feed direction from right to left. If desired, the dancer arm can be switched to the opposite side for a left to right material feed direction. Remove counterweight, loosen knurled knob, remove dancer arm, rotate dancer arm shaft to opposite side, re-install dancer arm, tighten knurled knob, re-install counterweight. At this point you will need to re-calibrate the dancer arm high and low limits. Refer to pages 8-9 in this manual for that procedure.

4. Loading coil R50 series: To load a coil on fixed center, remove outer coil plate, install coil, re-install outer coil plate. To load a coil on adjustable center, remove outer coil plate, install coil on centering arms and adjust centering arms until tight on coil I.D. Re-install outer coil plate.

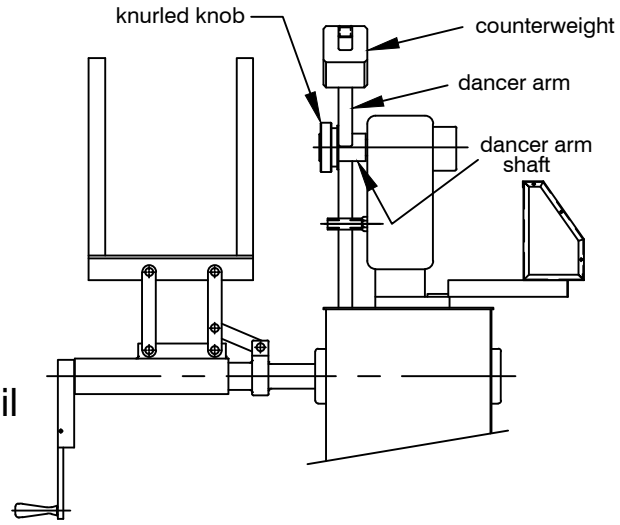

Loading coil 1000 series: To load a coil remove three outer keeper arms. Install coil on coil support plates and adjust until tight on coil I.D. For best results, support weight of coil while expanding coil support plates. Re-install outer keeper arms.

OPERATION

1. Your dual swivel decoiler has an "active" side for paying out material and an "inactive" side for loading material. The reel heads must be locked into position before the "active" side will function.

2. To move a coil from the "inactive" side to the "active" side depress the foot pedal until shotpin is disengaged. Slowly rotate unit 180° until the spring loaded shotpin engages. Your new coil should now be "active".

KEYPAD FUNCTIONS

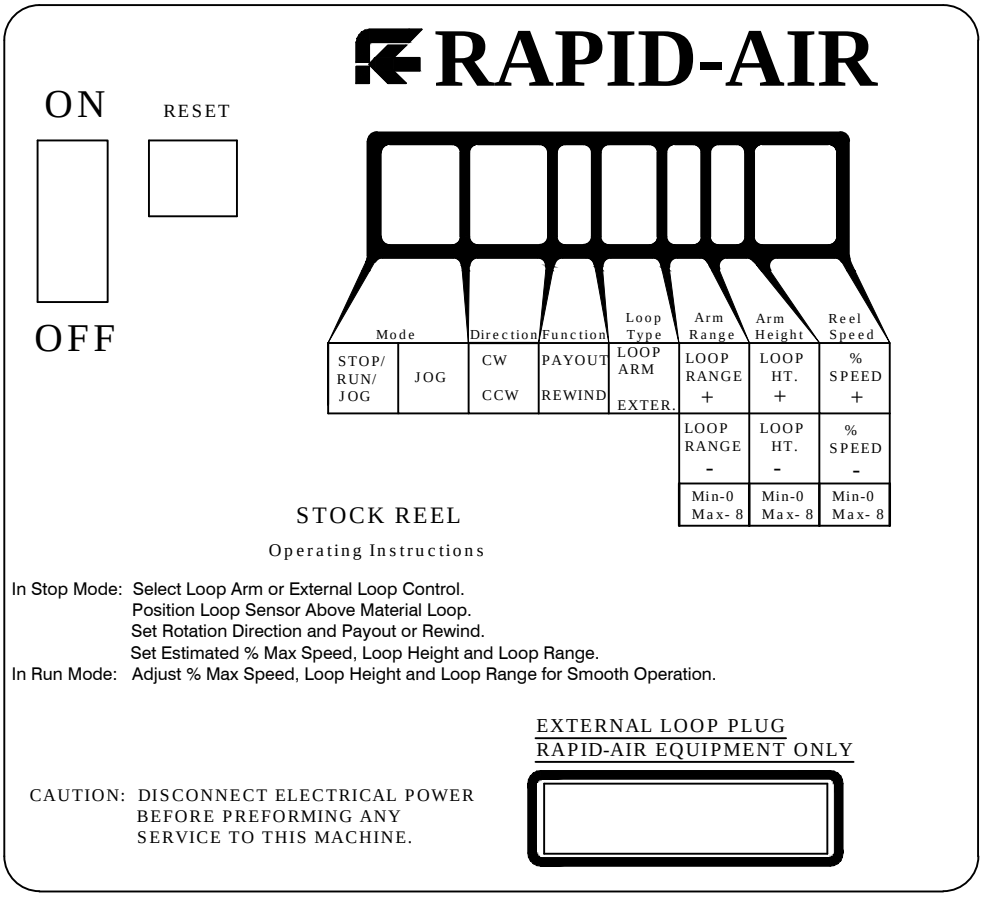

On/Off switch

This illuminated switch is the main power switch for the controller. It must be "ON" for the reel to function.

Reset switch

This is the main circuit breaker for the reel.

Run/Stop/Jog

In the Run mode, if the dancer arm is moved the coil will turn.

In the Jog mode, the jog button has to be depressed for the coil to turn. Jog function is used mainly for setup or rewinding excess material.

In the Stop mode there is no movement of the coil.

KEYPAD FUNCTIONS

Directional control function

Select the direction the reel will turn, clockwise or counter-clockwise. Look at how the coil is wound and determine which way the coil should unwind. Push button until correct rotation is displayed. CW=Clockwise CCW=Counter-clockwise

Note: this function can only be changed with reel in "Stop mode"

Payout/Rewind function

The Payout/Rewind function selects how the dancer arm will work as the dancer arm is raised or lowered.
In the Payout mode the reel speed will increase as the dancer arm is raised. In the Rewind mode the reel speed will increase as the dancer arm is lowered.

Note: this function can only be changed with reel in "Stop mode"

Loop arm/external switch

When using a dancer arm, select loop arm button to display "LV" for vertical reel. This button will also allow you to select "LH" for horizontal reel. ("LH" is used for Pallet Master decoilers only)

When using an external loop control, select external loop to display "RT" for RTB or "RS" for RS2.

Note: Remote interface port "D" connector, if used, communicates with external loop control.

Warning! - Never plug any type of computer or non Rapid-Air equipment into this plug or severe damage will result. Consult factory when installing new external controls.

KEYPAD FUNCTIONS

Loop range/height

The loop range function selects the degree of arm movement to achieve maximum motor speed. If a loop range of "0" was selected the the arm would only have to travel approximately 6° to have the reel at full speed. If a loop range of "8" was selected the arm would travel approximately 60° to have the reel at full speed. This function is active in the "RUN" mode.

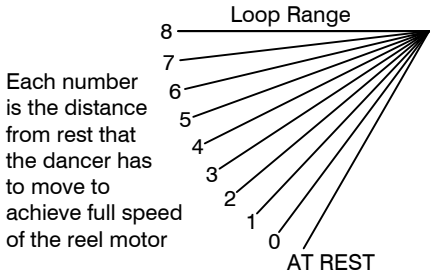

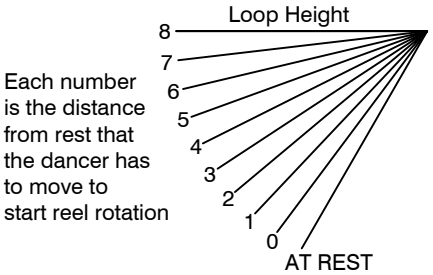

The loop height function selects the degree of arm movement to start reel rotation. If a loop range of "0" was selected the the arm would only have to travel approximately 6° to start reel rotation. If a loop range of "8" was selected the arm would travel approximately 60° before starting reel rotation.

To set the loop height, thread up the material with the dancer arm resting on the material. If the reel is running with the dancer arm in this position adjust the loop height until reel stops. This is your new at rest position. This function is active in the "RUN" mode.

% Speed setting

The % speed setting allows you to adjust the maximum speed the reel will rotate. This should be set to maintain a constant feed rate. This function is active in the "RUN" mode.

JOG SPEED ADJUSTMENT & DANCER ARM CALIBRATION

Your reel was shipped with the dancer arm set up for it's correct position so the only thing that has to be reset would be the jog speed if you need your unit to jog faster or slower.

To reset the jog speed, turn off the main power switch. Press and hold the "Run/Stop/Jog" button while turning the main power switch on. The first screen you will see will display the jog speed percentage.

```
JOG SPEED    23%   +
NEXT               −
```

To increase the jog speed, press the "Reel Speed" [% SPEED +] pushbutton. If you want to decrease the jog speed press the "Reel Speed" [% SPEED −] pushbutton.

The jog speed is shown in the percent of maximum jog speed. Once you have set the desired jog speed push the "Run/Stop/Jog" button once for next. Your jog speed is now set.

The next screen asks if you want to set up the sensor (commonly referred to as "dancer arm calibration"). Use the percent speed buttons to select "yes" or "no".

Select "no" if all you wanted to do was change the jog speed, select "yes" if you want to calibrate the dancer arm by resetting the sensor.

```
SETUP SENSOR     YES
NEXT             NO
```

After making your selection, press "Run/Stop/Jog" for next.

If you selected "yes" the next screen asks you to set the low set point. If the dancer arm is resting on the positive stop then just save this setting by pushing the "Run/Stop/Jog" button.

```
SENSOR LOW SETPOINT
SAVE               xxx
```

JOG SPEED ADJUSTMENT & DANCER ARM CALIBRATION

The next screen is for setting the high set point. Raise the dancer arm to it's upper stop position and press the "Run/Stop/Jog" button once to save this setting.

```
SENSOR HIGH SETPOINT
SAVE                xxx
```

The next screen is to set the offset of the program. Potentiometers are hard to get set perfectly so we've built in an offset. After setting the high & low points, with the dancer arm resting on the positive stop, put the unit in the "Run" mode. If the unit starts running with the dancer arm on the positive stop then an offset needs to be put in. If an offset needs to be put in go through the setup procedure again until you get to the low offset screen. Using the percent speed buttons put in an offset value of -3 to -5. Press the "Run/Stop/Jog" button to save this setting.

```
LOW OFFSET    +0   +
NEXT               −
```

You now have set the dancer arm limits. The next screen to appear allows you to exit the setup. Use the percent speed button to enter "yes or no".

```
EXIT SETUP        YES
                  NO
```

If "yes" was selected press "Run/Stop/Jog" button and the next screen appears.

```
SHUT OFF POWER TO
SAVE AND EXIT
```

Power off unit, the dancer arm is now ready for production running.

MAINTENANCE

Gearbox lubrication - change oil every 1000 hours as follows:

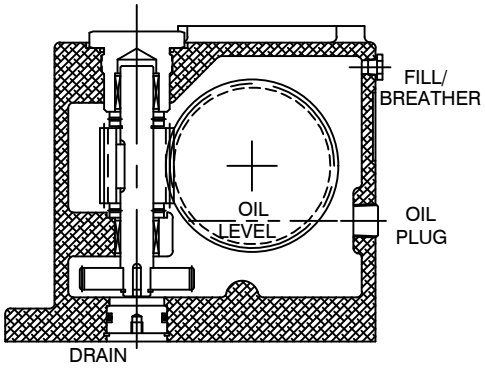

RS50

Fill to center of oil plug
Mobil SHC630
Approx. 20 oz.

RSA1500, RSA2500, RSA4000, RSA6000 Stock Reels

These reels use a Baldor gearbox. Baldor gearboxes use a synthetic oil that does not require periodic changing. The oil in these Baldor gearboxes should only be changed when maintenance is performed on these gearboxes that require disassembly. Use only Klubersynth #UH1-6-460 oil.

Electrical - all brushes on motors should be checked every 1500-2000 hours.

TROUBLESHOOTING

MAIN SWITCH ON BUT NOT LIT

1. Circuit breaker tripped
   a. Reset circuit breaker
2. Unit not plugged into main power
   a. Plug into main power
3. No power in incoming line
   a. Check outlet
   b. Check power cord
4. Loose wiring
   a. Check terminals and connections

MOTOR CREEPS IN STOP POSITION

1. "Min." speed pot on RAMM board out of adjustment
2. Offset in dancer arm setup out of adjustment (see page 8)

UNIT ON BUT MOTOR WON'T RUN
(armature voltage present on RAMM board)

1. Check motor wiring
   a. replace motor cord or correct motor wiring (consult factory)
2. Check motor
   a. Worn brushes or defective motor (consult factory)
   b. Check for oil in motor, gear box oil seal may have failed

UNIT ON BUT MOTOR WON'T RUN
(no armature voltage present on RAMM board)

1. Selector switch not in "RUN" position
   a. Turn selector switch to "RUN" position
2. If running with a dancer arm control
   a. Check that the external/loop arm function is in the loop arm position
3. If running with external control
   a. Check that the external/loop arm function is in the external position
4. Loop height switch setting to high
   a. Set height setting to "0"

TROUBLESHOOTING

5. Percent speed function set too low
   a. Adjust percent speed function to 100%

6. Fuses blown
   a. Check fuses & circuit breaker

7. No AC voltage at DC drive board
   a. Check wiring

8. Check signal voltage between P2 to P1 on DC drive
   0-6 VDC - RAMM
   0-9 VDC - Regen drive
   while moving dancer arm
   a. If there is a signal, check continuity between I1 & I2
   If no continuity, replace DC drive or consult factory

9. Check pico fuse on 69100804 board (F1)
   a. Replace fuse, 1 amp pico fuse-consult factory

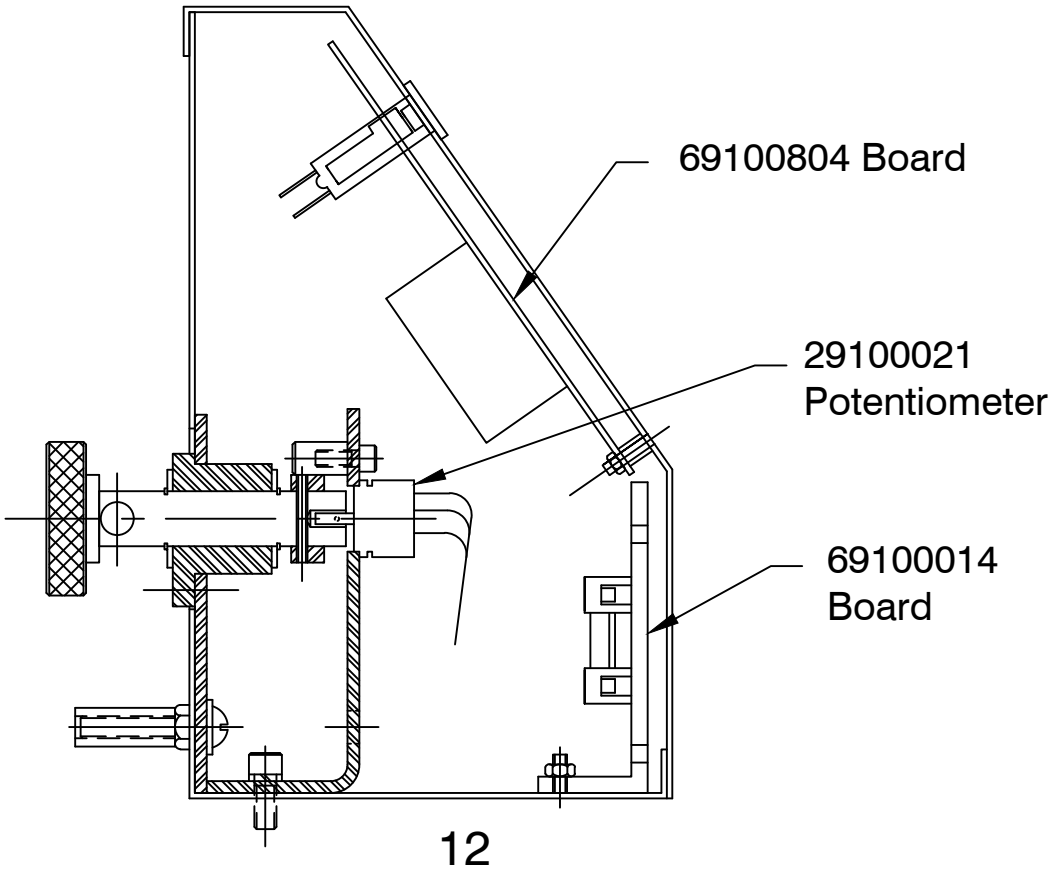

WIRING DIAGRAM

(1/2 HP)

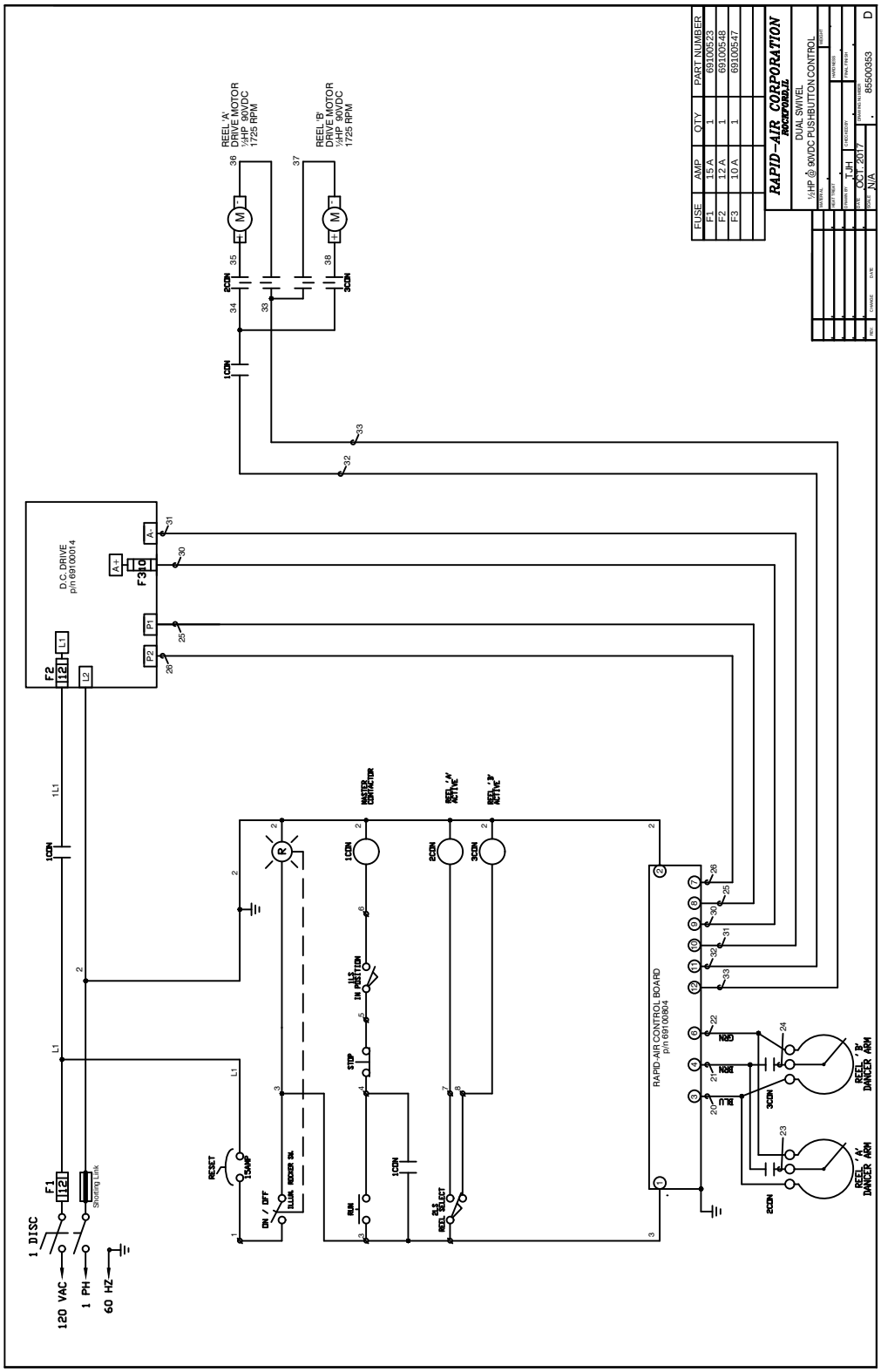

FUSE	AMP	QTY	PART NUMBER
F1	15 A	1	69100523
F2	12 A	1	69100548
F3	10 A	1	69100547

WIRING DIAGRAM

(1 HP)

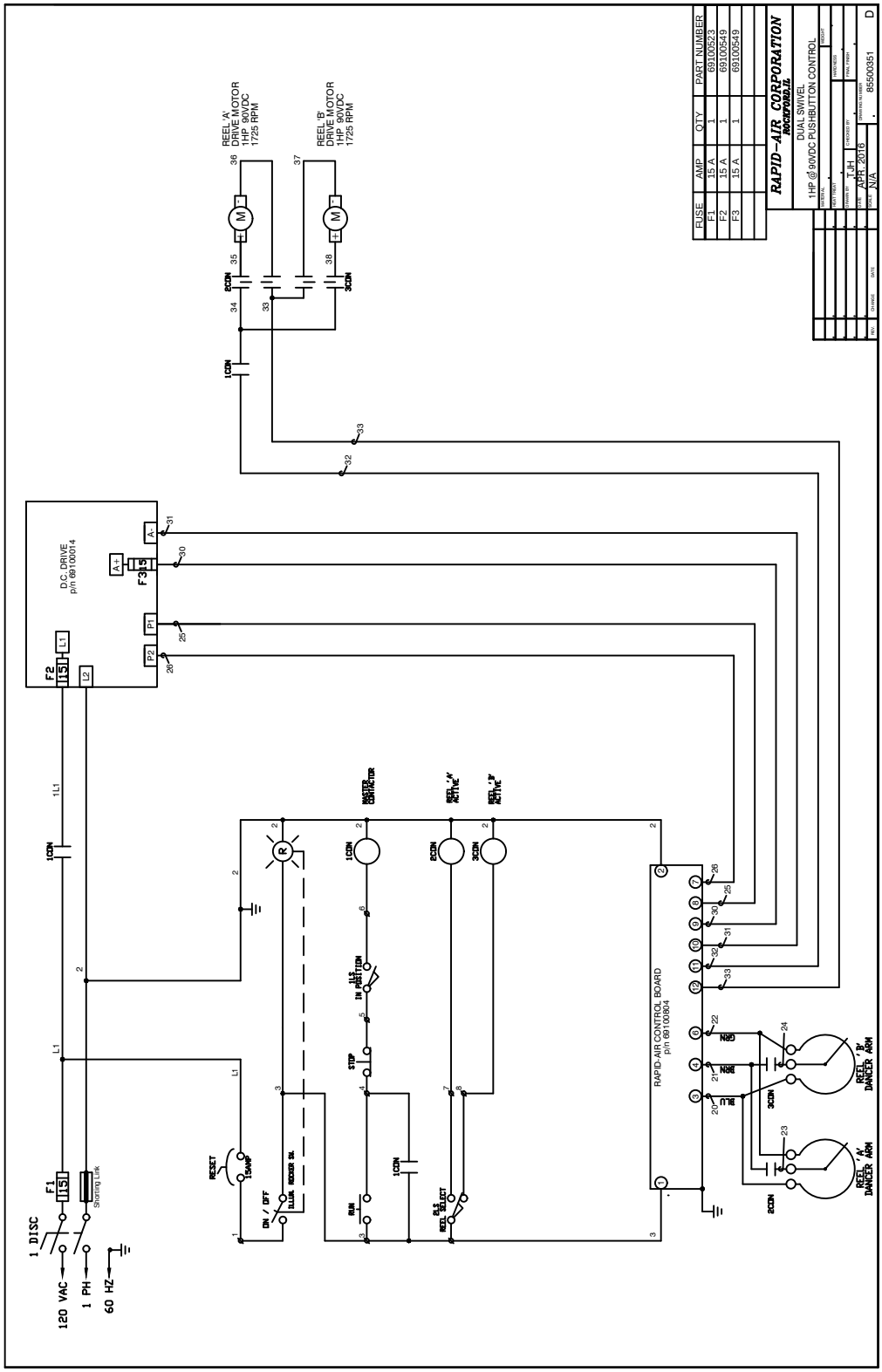

WIRING DIAGRAM

(1 1/2 HP)

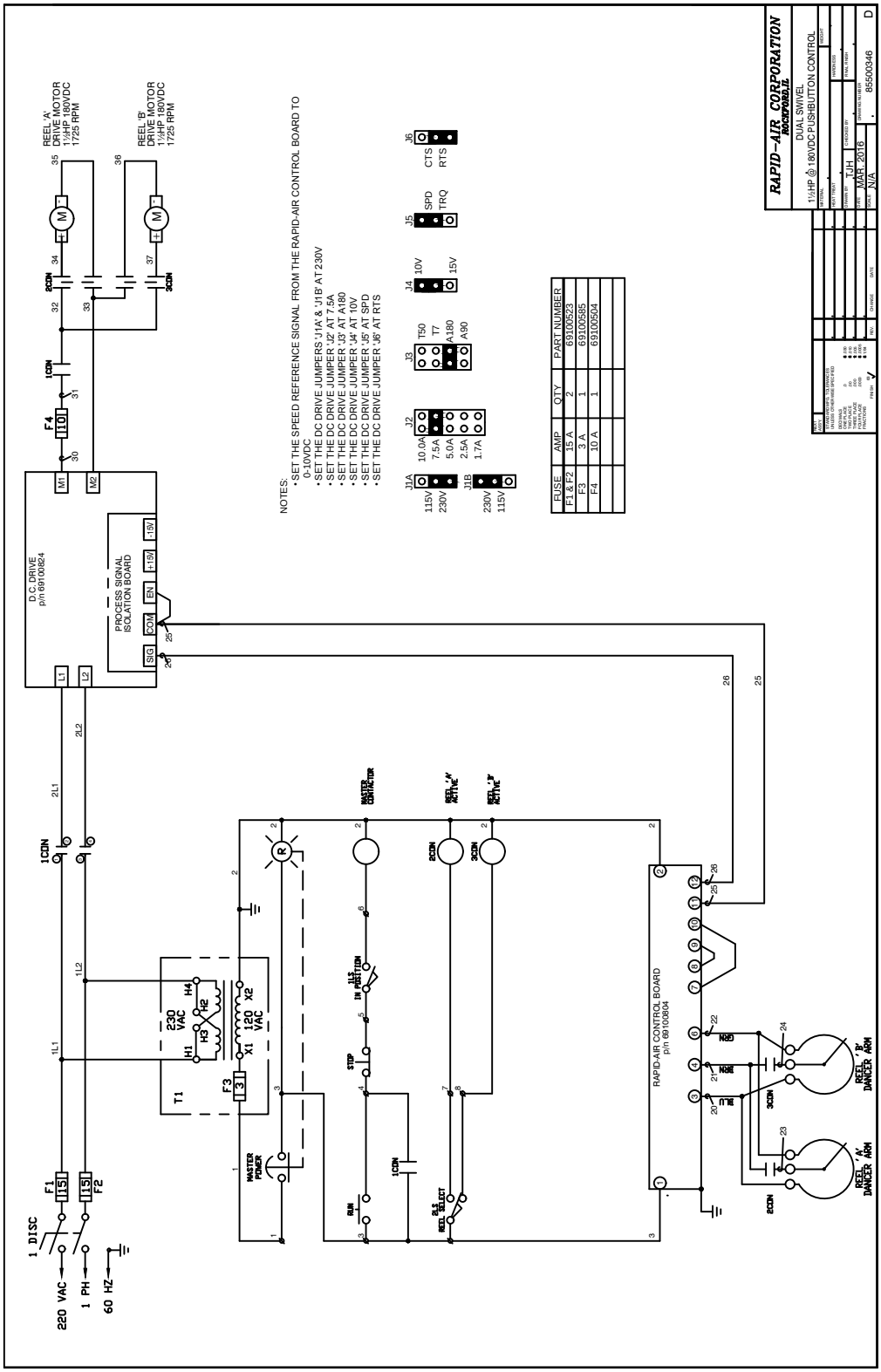

WIRING DIAGRAM

(2 HP)

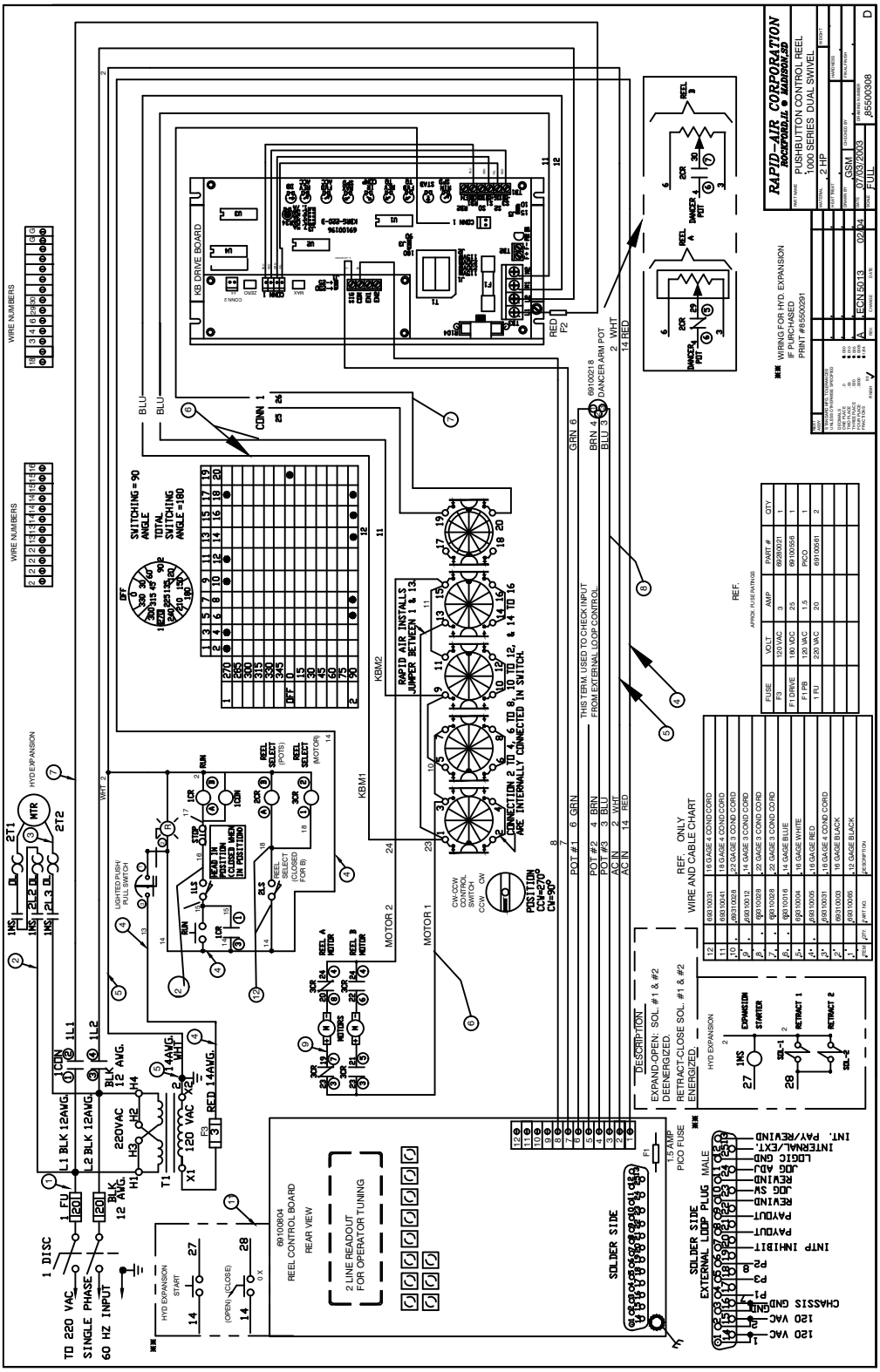

DESCRIPTION

EXPAND-OPEN: SOL. #1 & #2 DEENERGIZED.

RETRACT-CLOSE SOL. #1 & #2 ENERGIZED.

REF. ONLY
WIRE AND CABLE CHART

ITEM	QTY.	PART NO.	DESCRIPTION
12		69310031	16 GAGE 4 COND CORD
11		69310041	18 GAGE 4 COND CORD
10		69310028	22 GAGE 3 COND CORD
9		69310012	14 GAGE 3 COND CORD
8		69310028	22 GAGE 3 COND CORD
7		69310028	22 GAGE 3 COND CORD
6		69310016	14 GAGE BLUE
5		69310004	16 GAGE WHITE
4		69310005	16 GAGE RED
3		69310031	16 GAGE 4 COND CORD
2		69310003	16 GAGE BLACK
1		69310065	12 GAGE BLACK

REF.
APROX. FUSE RATINGS

FUSE	VOLT	AMP	PART #	QTY
F3	120 VAC	3	69280021	1
F1 DRIVE	180 VDC	25	69100556	1
F1 PB	120 VAC	1.5	PICO	1
1 FU	220 VAC	20	69100561	2

✱✱ WIRING FOR HYD. EXPANSION
IF PURCHASED
PRINT #85500291

STANDARD MFG. TOLERANCES UNLESS OTHERWISE SPECIFIED

DECIMALS		
ONE PLACE	.0	±.030
TWO PLACE	.00	±.010
THREE PLACE	.000	±.005
FOUR PLACE	.0000	±.0005
FRACTIONS		±1/64

FINISH 63 ✓

REV.	CHANGE	DATE
A	ECN 5013	02/04

RAPID-AIR CORPORATION
ROCKFORD,IL ● MADISON,SD

PART NAME PUSHBUTTON CONTROL REEL 1000 SERIES DUAL SWIVEL
MATERIAL 2 HP
WEIGHT
HEAT TREAT
HARDNESS
DRAWN BY GSM
CHECKED BY
FINAL FINISH
DATE 07/03/2003
DRAWING NUMBER 85500308 D
SCALE FULL