STRAIGHTENER / RAPID-ROLL OPERATING INSTRUCTIONS

MODELS

SA3 - SD WITH COMPACT CONTROL

(5-07)

RAPID-AIR CORPORATION
4601 KISHWAUKEE ST. • ROCKFORD, IL 61109-2925
Phone: (815) 397-2578 • Fax: (815) 398-3887 • Web Site: www.rapidair.com

TABLE OF CONTENTS

Straightener Layout Sheet SBX ..... pg. 3
Straightener Layout Sheet SCX ..... pg. 4
Platen Adjustment Bulletin ..... pg. 5
Specifications ..... pg. 6
Installation ..... pg. 7
Start-Up Procedure ..... pg. 8
Electrical Controls Layout ..... pg. 9-10
Dancer Arm Adjustment Explanation ..... pg. 11
Standard and Optional Components ..... pg. 12
Operations ..... pg. 13
Maintenance ..... pg. 13
Troubleshooting Guide ..... pg. 14
Taut Stock Explanation ..... pg. 15
RAMM Board Explanation ..... pg. 16-19
Warranty ..... pg. 20
Electrical Schematics ..... pg. 21-23
Mechanical Parts List SBX ..... pg. 24-27
Mechanical Parts List SCX ..... pg. 28-33
Typical Stamping Layout ..... pg. 34
Straightener SA3 - SB4 ..... pg. 35-36
Rapid Roll ..... pg. 37-38

UNIT	"A"	"B"	"C"	"D"
SBX-4	28.0	20.0	46.5	40.5
SBX-8	28.0	26.0	46.5	40.5
SBX-12	28.0	26.0	46.5	40.5

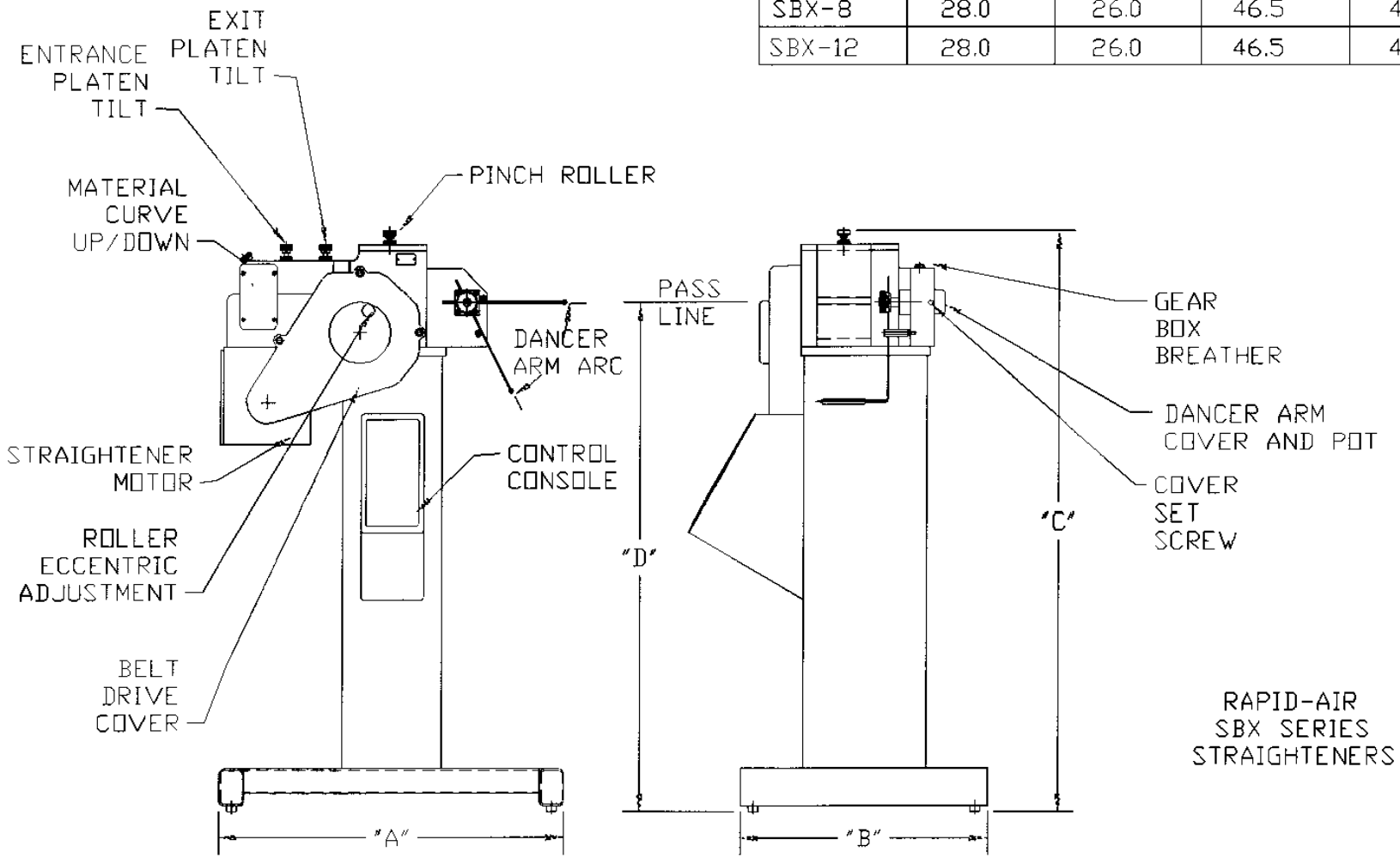

RAPID-AIR
SBX SERIES
STRAIGHTENERS

SCX & SD Series

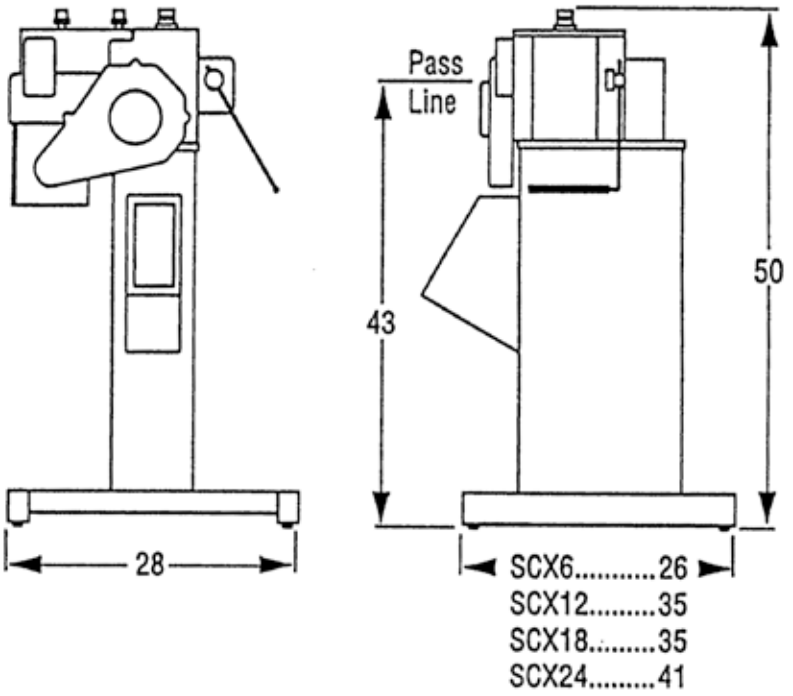

SCX & SD Series with Inclined Head

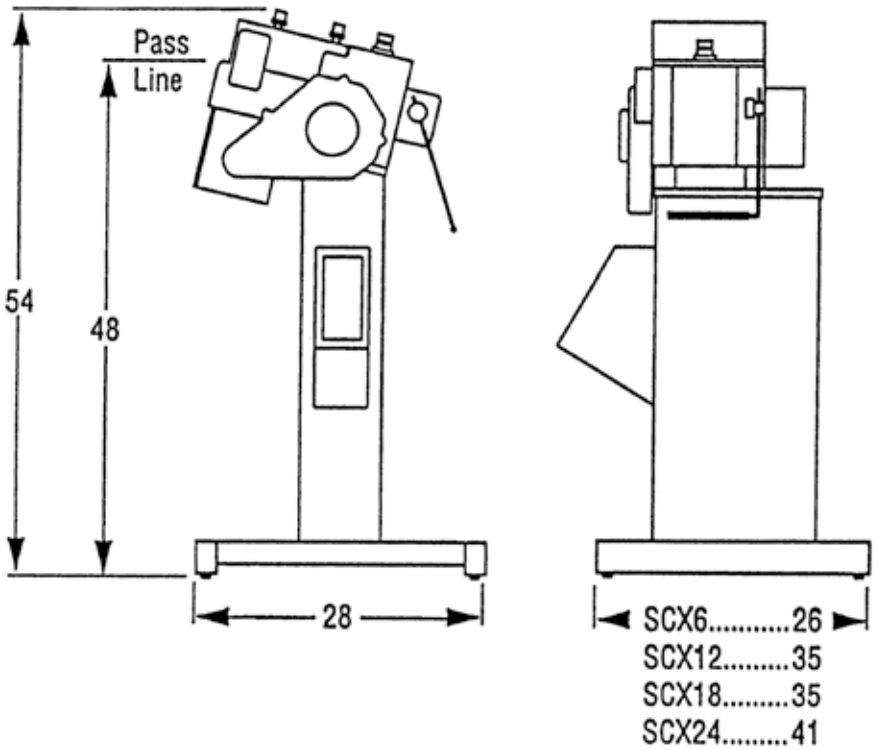

Tech Bulletin

No. 180

Adjustable Platen Stock Straighteners vs. Straighteners with Traditional Vertical Roll Adjustment

CONCEPT: The concept behind a movable platen containing the upper bank of rolls for straighteners can be somewhat difficult to grasp, but once the principles are understood the superiority of this system becomes obvious. To explain the differences between the adjustable platen system and one that uses traditional single-point vertical roll adjustment, we are describing both types of systems here.

VERTICALLY ADJUSTABLE UPPER ROLLS: For centuries the bending of materials has been done by variations of a three-roll arrangement as illustrated in **Figure 1**.

Figure 1

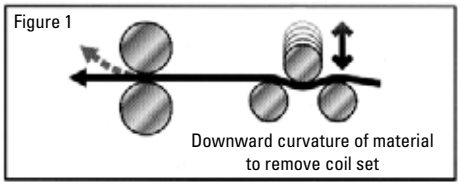

Bending occurs when one roll is forced into the space between the other two rolls for downward curvature of the material to remove coil set. Pressroom straighteners add multiple three-roll combinations in order to level the material in small increments at each stage. This method can provide acceptable results for some materials, but is limited because correction of material curvature is effective in only one direction as illustrated in **Figure 2**.

Figure 2

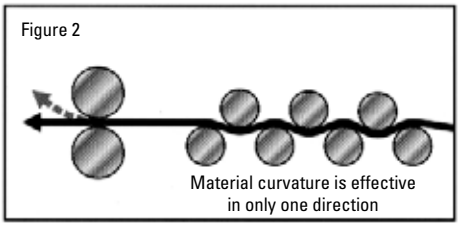

If the straightener is made to correct a clockwise curvature, it is often impossible to correct a counterclockwise curvature. The only available adjustment is the variation of the degree of bend at each station. This is true even for straighteners that have banked upper rolls that pivot for two-point adjustment.

SIX-WAY UPPER ROLL ADJUSTMENT: After manufacturing straighteners with vertically adjustable rolls for many years, Rapid-Air developed and patented the adjustable platen type straightener as illustrated in **Figure 3**.

Figure 3

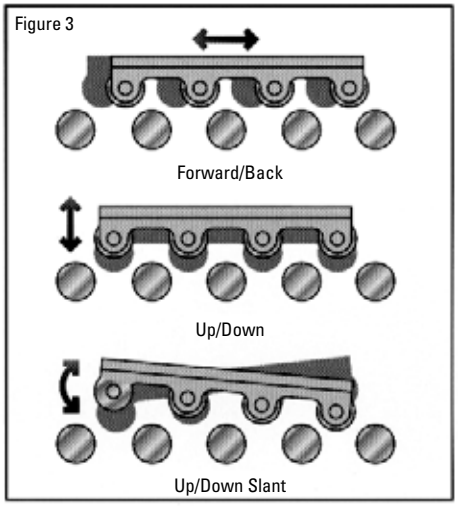

This design mounts the upper rolls in a platen which can be adjusted for *degree of bend* as illustrated in **Figure 4** and **Figure 5**

Figure 4

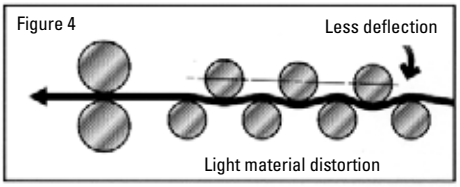

Figure 5

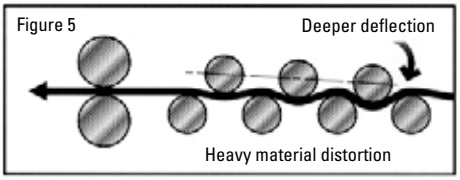

and for *curvature direction* as shown in **Figure 6** and **Figure 7**.

Figure 6

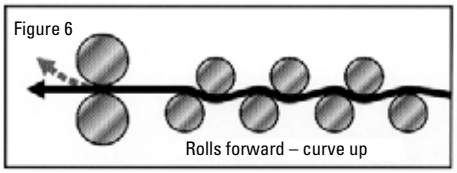

Figure 7

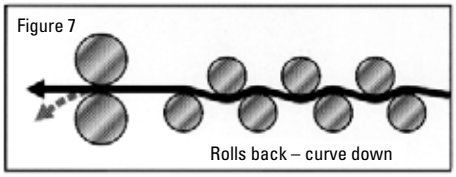

To more easily explain the concept, **Figure 8** shows a three-roll combination with the upper roll forward and **Figure 9** shows a three-roll combination with the upper roll to the rear.

Figure 8

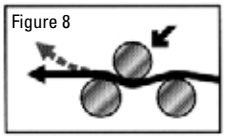

Figure 9

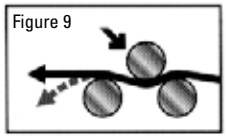

Notice that the sharpest bend occurs where two rolls are in close proximity. When the upper roll is forward, the curvature will be up and when the forward roll is adjusted to the rear, the bend will be down. The degree of bend can be adjusted by a combination of vertical and horizontal adjustments.

ADVANTAGES: The high degree of flexibility afforded by the adjustable platen design provides a predictable straightening method for a wide variety of materials and takes a lot of the "Black Magic" out of pressroom straightener setup. The reduction in the flexing and distortion of the strip of material and the reduction of the straightening power required allows effectiveness with heavy materials. Additionally, the ability to place rolls in a proper close proximity allows effective straightening with very thin materials.

ROLL DIAMETER: The smaller the roll diameter in a straightener the better it is able to remove distortions in the strip of material, but this factor is compromised by the requirement of larger rolls in wider models of straighteners in order to prevent deflection of the rolls themselves. Rapid-Air straighteners are designed to optimize all factors (including number of rolls, diameter and position) within the published material capacities and specifications for each model.

SWING-OPEN TOP: Rapid-Air developed and introduced the swing-open top for straighteners in order to facilitate the cleaning of rolls and the threading of a new strip of material through the straightening rolls. For convenience and safety, each top is counterbalanced and held in the open position until it is clamped for operation. Roll adjustment settings are maintained when the top is closed and locked.

AVAILABILITY: All models of Rapid-Air straighteners are presently available with the adjustable platen design with an expanded range of models being introduced in the coming months.

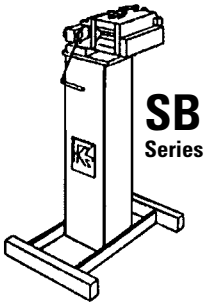

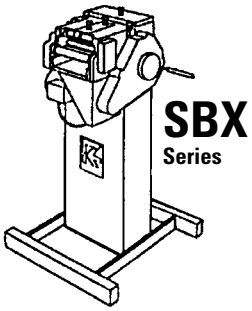

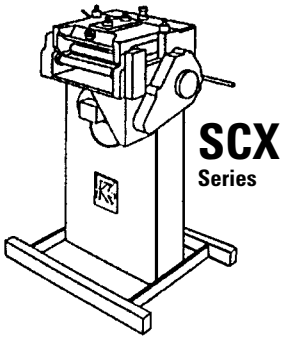

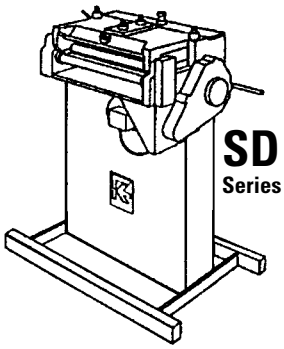

SPECIFICATIONS

Model	Max Material Width	Effective Straightening Range	Max Speed per min	Speed	Straightening Rolls No., Dia.	Pinch Rolls (2) Dia.	Drive Motor (HP)	Input Power (vac/ph)
SA3	3” (76mm)	.002” - .030” (.051-.76mm)	700” (1778cm)	Standard	11, 3/8 (9.53mm)	1-1/2 (38.1mm)	1/4	115/1
SA3M	3” (76mm)	.002” - .030” (.051-.76mm)	1,400” (3556cm)	Medium	11, 3/8 (9.53mm)	1-1/2 (38.1mm)	1/2	115/1
SB4	4” (102mm)	.003” - .050” (.076-1.27mm)	700” (1778cm)	Standard	11, 5/8 (15.86mm)	1-1/2 (38.1mm)	1/2	115/1
SB4M	4” (102mm)	.003” - .050” (.076-1.27mm)	1,400” (3556cm)	Medium	11, 5/8 (15.86mm)	1-1/2 (38.1mm)	1/2	115/1
SBX4	4” (102mm)	.004” - .080” (.10-2.03mm)	825” (2100cm)	Standard	9, 7/8 (22.23mm)	1-3/4 (44.45mm)	3/4	115/1
SBX8	8” (203mm)	.004” - .070” (.10-1.78mm)	825” (2100cm)	Standard	9, 7/8 (22.23mm)	1-3/4 (44.45mm)	3/4	115/1
SBX12	12” (305mm)	.004” - .060” (.10-1.52mm)	825” (2100cm)	Standard	9, 7/8 (22.23mm)	1-3/4 (44.45mm)	3/4	115/1
SBX4M	4” (102mm)	.004” - .080” (.10-2.03mm)	1,650” (4200cm)	Medium	9, 7/8 (22.23mm)	1-3/4 (44.45mm)	1	115/1
SBX8M	8” (203mm)	.004” - .070” (.10-1.78mm)	1,650” (4200cm)	Medium	9, 7/8 (22.23mm)	1-3/4 (44.45mm)	1	115/1
SBX12M	12” (305mm)	.004” - .060” (.10-1.52mm)	1,650” (4200cm)	Medium	9, 7/8 (22.23mm)	1-3/4 (44.45mm)	1	115/1
SCX6	6” (152mm)	.006” - .100” (.15-2.54mm)	825” (2100cm)	Standard	9, 1-3/8 (34.93mm)	1-3/4 (44.45mm)	1	115/1
SCX12	12” (305mm)	.006” - .090” (.15-2.29mm)	825” (2100cm)	Standard	9, 1-3/8 (34.93mm)	1-3/4 (44.45mm)	1	115/1
SCX18	18” (457mm)	.006” - .080” (.15-2.03mm)	825” (2100cm)	Standard	9, 1-3/8 (34.93mm)	1-3/4 (44.45mm)	1	115/1
SCX24	24” (610mm)	.006” - .065” (.15-1.65mm)	825” (2100cm)	Standard	9, 1-3/8 (34.93mm)	1-3/4 (44.45mm)	1	115/1
SCX6M	6” (152mm)	.006” - .100” (.15-2.54mm)	1,650” (4200cm)	Medium	9, 1-3/8 (34.93mm)	1-3/4 (44.45mm)	2	230/1
SCX12M	12” (305mm)	.006” - .090” (.15-2.29mm)	1,650” (4200cm)	Medium	9, 1-3/8 (34.93mm)	1-3/4 (44.45mm)	2	230/1
SCX18M	18” (457mm)	.006” - .080” (.15-2.03mm)	1,650” (4200cm)	Medium	9, 1-3/8 (34.93mm)	1-3/4 (44.45mm)	2	230/1
SCX24M	24” (610mm)	.006” - .065” (.15-1.65mm)	1,650” (4200cm)	Medium	9, 1-3/8 (34.93mm)	1-3/4 (44.45mm)	2	230/1
SCX6H	6” (152mm)	.006” - .080” (.15-2.03mm)	4,100” (10400cm)	High	9, 1-3/8 (34.93mm)	1-3/4 (44.45mm)	3	230/1
SCX12H	12” (305mm)	.006” - .070” (.15-1.78mm)	4,100” (10400cm)	High	9, 1-3/8 (34.93mm)	1-3/4 (44.45mm)	3	230/1
SCX18H	18” (457mm)	.006” - .060” (.15-1.52mm)	4,100” (10400cm)	High	9, 1-3/8 (34.93mm)	1-3/4 (44.45mm)	3	230/1
SCX24H	24” (610mm)	.006” - .055” (.15-1.40mm)	4,100” (10400cm)	High	9, 1-3/8 (34.93mm)	1-3/4 (44.45mm)	3	230/1
SD6	6” (152mm)	.006” - .125” (.15-3.18mm)	825” (2100cm)	Standard	9, 1-3/8 (34.93mm)	1-3/4 (44.45mm)	2	230/1
SD12	12” (305mm)	.006” - .125” (.15-3.18mm)	825” (2100cm)	Standard	9, 1-3/8 (34.93mm)	1-3/4 (44.45mm)	2	230/1
SD18	18” (457mm)	.006” - .100” (.15-2.54mm)	825” (2100cm)	Standard	9, 1-3/8 (34.93mm)	1-3/4 (44.45mm)	2	230/1
SD24	24” (610mm)	.006” - .090” (.15-2.29mm)	825” (2100cm)	Standard	9, 1-3/8 (34.93mm)	1-3/4 (44.45mm)	2	230/1
A right-to-left material flow direction is standard for above models — left-to-right optional at no additional cost.								
SC4	4” (102mm)	.015” - .085” (.38-2.13mm)	825” (2100cm)	Standard	9, 1-1/4 (31.75mm)	1-1/4 (31.75mm)	1	115/1

Model SC4

Model SC4 Straightener with individually adjustable upper rolls. This 4” x .085” capacity straightener with its counterbalanced swing-open top is a Rapid-air original and continues to be available due to customer acceptance and demand. Dial-type indicators for roll settings are optional.

A NOTE ON ROLL DIAMETER AND QUANTITY:
The smaller the roll diameter in a straightener the better it is able to remove distortions in the strip of material. Rapid-Air straighteners are designed to optimize all factors (including number of rolls, diameter and position) within the published material capacities and specifications for each model.

INSTALLATION

Operating Instructions For Straighteners / Rapid Roll

Align the Rapid Roll with the feed allowing sufficient space for free stock for the feed. The loop control arm roller rests on the stock between the Rapid Roll and the press. The Rapid Roll should be bolted to the floor, especially when used to pull stock from a non-powered reel.

The pinch rolls must be parallel in the lateral (horizontal plane to insure that there will be equal pinch force along the full width of the stock). An upper pinch roll adjustable eccentric trunion is slotted with a locking screw in its center. Adjust parallelism of the rolls by loosening the center screw and rotating the trunion through 180 degrees. A wide blade screwdriver and allen wrench may be used. Use a feeler gauge to check for equal spacing on either side of the pinch rolls.

Perform a visual check by lifting the cover and placing a white piece of paper in front of the pinch rolls to reflect light through the space between. Tighten the pinch roll knob so the rolls just touch. Observe the slit of reflected light between the rolls and make any final adjustment. Tighten the trunion lock screw. Raise the pinch roll to allow clearance for the next setup procedure.

The main control unit is located behind the side access cover. On pages 9 & 10 is an illustration of the layout of the control panel. This diagram lists all the components and the approximate location of each that could be used for troubleshooting the machine if a problem should occur. The reel is shipped with - 120 vac (1 phase) input. Visually check all electrics before starting the reel.

START UP PROCEDURE

Prior to applying power to the straightener, all the controls on the machine should be reviewed.
A brief summary is listed below.

Main Console And Controller

The main control console with controls is mounted on the cabinet of the straightener. Located on the face of the console are five switches, one potentiometer, one push-button and one or two circuit breaker reset switches, which are explained below.

1. ON/OFF SWITCH
This illuminated switch is the main power switch for the controller.
On the 120 VAC straighteners, it will be a toggle switch and on the 230 VAC version it will be a mushroom push-button. It must be "ON" for the straightener to function.

2. RESET BUTTONS (circuit breaker)

120 VAC.
a. 15 amp – This is the main circuit breaker for the straightener.
b. 3 amp – This is the main circuit breaker for the "D-SUB" (25 pin) connector. Any shorting or overloads would trip this breaker.

240 VAC.
a. 3 amp – This is the main circuit breaker for the "D-SUB" connector. Any shorting or overloads would trip this breaker.

3. RUN/STOP/JOG SELECTOR SWITCH
a. If "RUN" was selected and the dancer control arm was raised, the straightener rolls would rotate. If "STOP" was selected then none of the functions would work. If "JOG" was selected then the jog button has to be depressed to have the straightener rolls rotate.

4. JOG BUTTON
Used for intermittent movement of the straightener rolls and mainly for setup. The jog speed can be adjusted by rotating the R3 potentiometer on the 69100079 board in the control sub panel.

5. % SPEED POTENTIOMETER
The % speed potentiometer adjusts the maximum speed that the straightener rolls can rotate regardless of the dancer arm height. It should be set to maintain a constant material feed rate through the straightener.

6. DANCER ARM LOOP HEIGHT AND RANGE ADJUSTMENT

a. Loop Range – The loop range switch adjusts the amount of travel that the dancer arm will move to provide the full range of speed on the straightener. It has three positions with a "0" as the least travel from slowest to fastest speed and a "2" has the most movement between slowest to fastest speed.

b. Loop Height – The loop height switch is used for setting the start position of the control arm. It has three positions with the "0" setting having the start position at the dancer arm rest position and the "2" having the start position somewhat higher than the dancer arm rest position. This setting will determine the dancer arm angle that the reel will start turning. This function is used to accommodate different thickness of material which would have a different bend radius thus requiting the dancer arm to be at a height somewhat above the home position when at rest.

7. LOOP ARM / EXTERNAL SWITCH
This switch is used to select whether the material loop is controlled by the dancer arm or an external loop control. If LOOP ARM is selected then the control will monitor the dancer arm movement. If EXTERNAL is selected then the control will monitor whatever is plugged into the "D-SUB" (25 pin) connector.

8. REMOTE INTERFACE PORT "D" CONNECTOR
This 25 pin connector, located on the lower portion of the console is used to communicate with external loop equipment. The RSB, RTB, & RTA will plug into the port and can immediately be implemented.

CAUTION: Never plug any type of computer or non Rapid-Air equipment into this plug or severe damage could result. Always consult the factory when installing different external controls for advice on compatibility and wiring information.

9. PANEL MOUNTED ELECTRICAL COMPONENT DESCRIPTION
69100034 board – proportional control board
69100076 board – component interface board
69100014 board – (RAMM) D.C. motor control board [120 VAC, 1 PH]
69100038 board – (RAMM) D.C. motor control board [240 VAC, 1 PH]

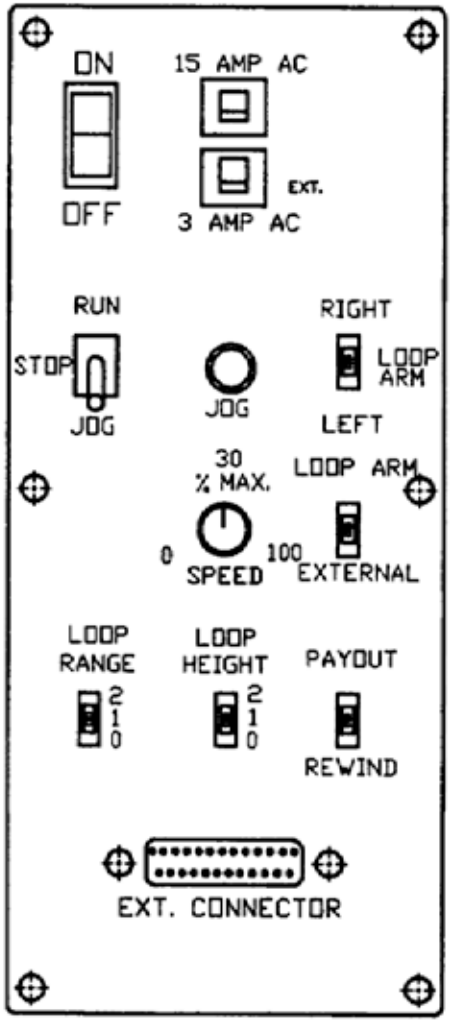

FRONT VIEW

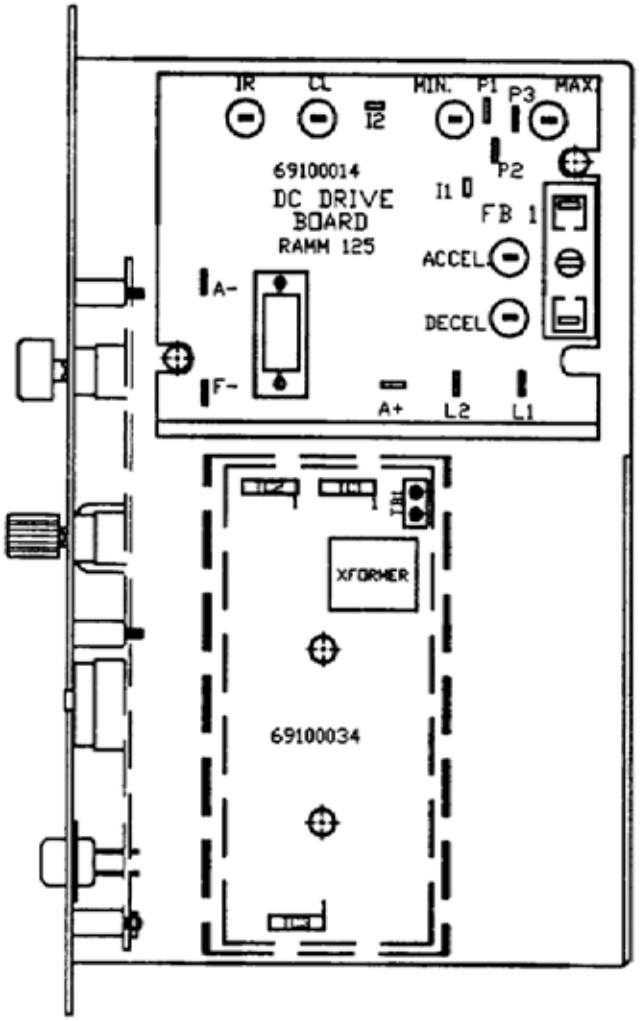

SIDE VIEW

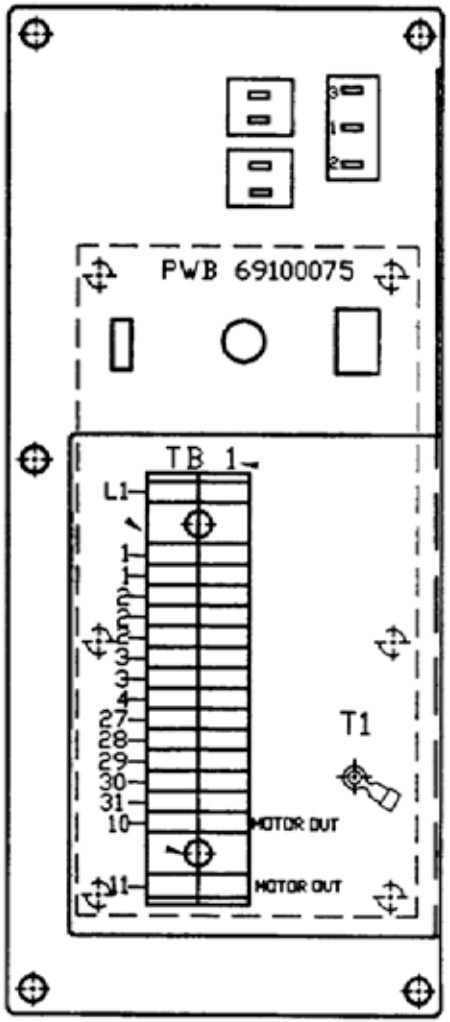

BACK VIEW

1 HP AND LOWER CONTROL

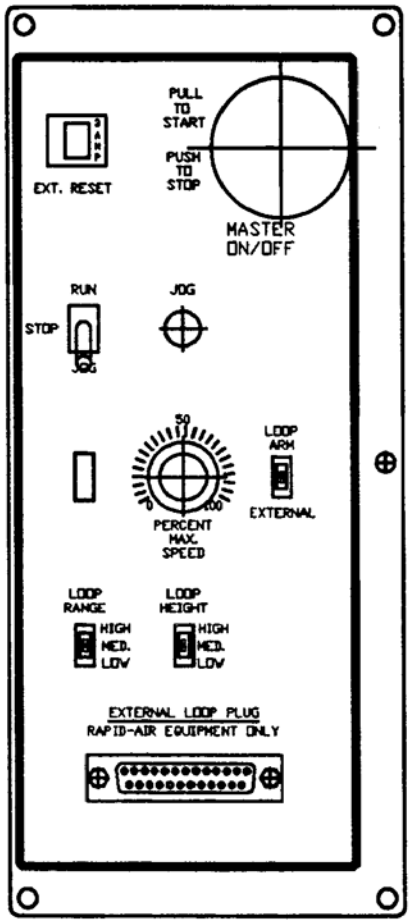

FRONT VIEW

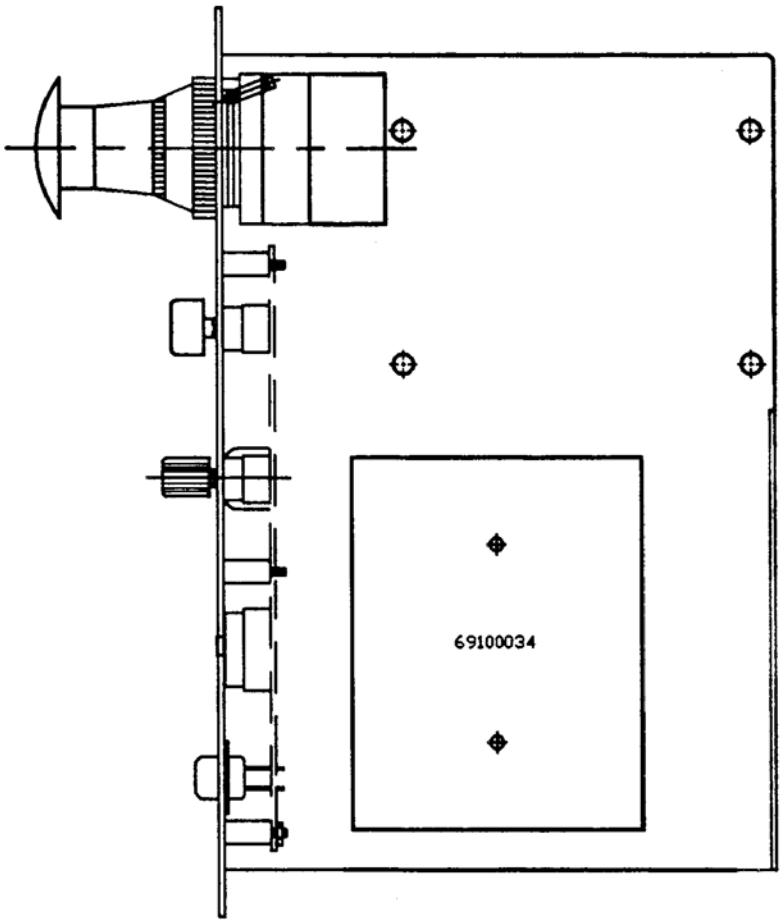

SIDE VIEW

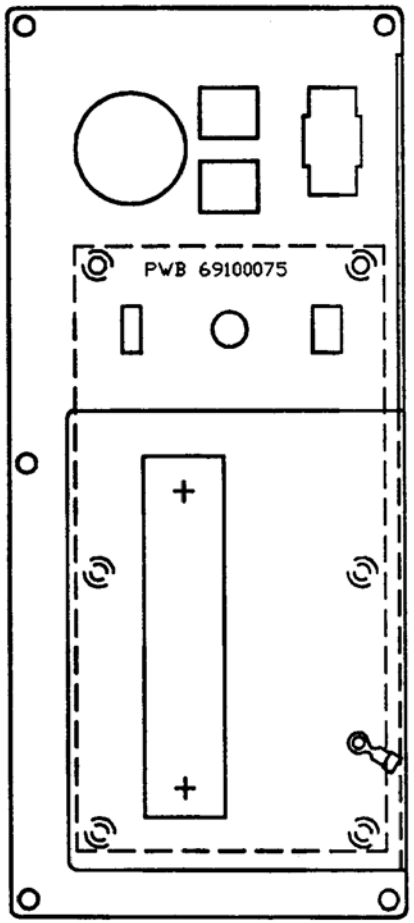

BACK VIEW

2 & 3 HP CONTROL

DANCER ARM LOOP

Dancer Arm Loop Height Adjustment

Three different loop sensing arm operating positions are selected manually during set-up. By selecting the higher number, the zero point of the dancer arm is raised from its rest position to the angle shown (as indicated 0-2). The dancer arm will move from rest position to the angle selected before the straightener rolls begin to rotate.

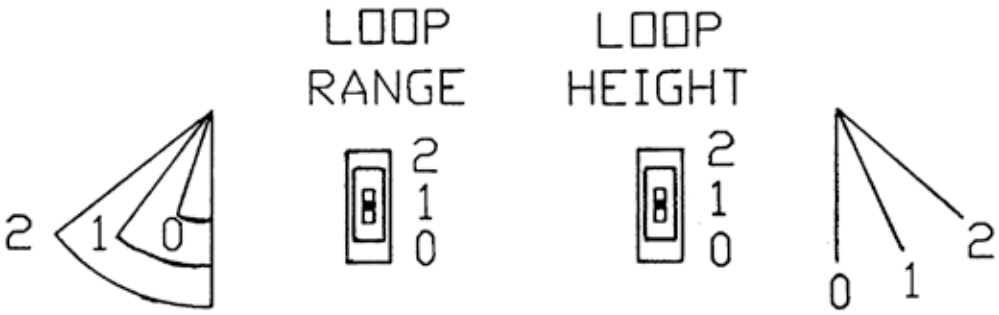

Dancer Arm Loop Range Function

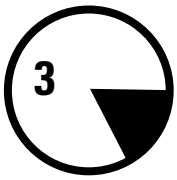

30 degree — Loop sensing arm travels through a full 30 degree arc to vary rotation speed from slow to full speed as controlled by % speed pot.

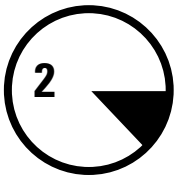

20 degree —Loop sensing arm travel through a 20 degree arc to vary speed from slow to full speed as controlled by % speed pot.

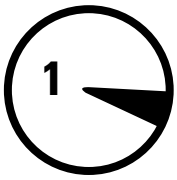

10 degree — Loop sensing arm travels through a 10 degree arc to vary rotation speed from slow to full speed as controlled by % speed pot.

STANDARD STRAIGHTENER COMPONENTS

Curve Up/Down Adjustment

Some applications have dies that cannot accept anything but flat stock and other dies run better with the material curving up or down to miss the built in edge required in the die. Before this feature was added, operators would under straighten or over straighten the material to suit their needs but in doing so would severely change the material entering the die. This not only caused feeding problems but part quality problems. With this feature, curve up or down can be accomplished by changing the position of the rolls without stressing the material.

Entrance Guide Roll Block

All straighteners are shipped with an entrance guide roll. This contains a roller and two adjustable edge guides.

OPTIONAL STRAIGHTENER COMPONENTS

Entrance Cascade Roll

The entrance cascade roll assembly is used to maintain a support arc for stock entering a feed. The cascade roll has three extra rollers to help the material flow better.

Exit Cascade Roll

The straightener is shipped with the exit side pre-drilled for the cascade roll or guide roll block. The entrance and exit use the same components.

Angle Bracket

Rapid-Air offers this accessory that mounts between the straightener head and the base. It angles the exit side of the straightener twelve degrees lower than the entrance side. This feature works very well when using the straightener to pull off a non-powered reel.

OPERATION

Once the straightener has been tested and all the functions work, then it should be tested for what it was designed to do and that is to remove coil set.

Retract all of the idler rolls and the exit pinch roll to a position so when the cover is closed the material is not being deformed. Open the cover of the straightener and position the edge guides for maximum width. Cut and place about a four foot length of the material onto the straightener rolls with the exit end of the material extending through the exit pinch rolls and centered from side to side in the straightener. Close the cover and latch it. Adjust the exit pinch roll enough to grip and hold the material. Adjust the edge guides so that they just touch the material.

Adjust the first idler roll knob, this is the one nearest the entrance of the straightener, so that it deforms the material no more than the thickness of the material. Adjust the second idler roll knob so it is lightly on the roll. Run the material to check that the exit pinch roll is not slipping on the material, readjust if necessary. This piece will still have coil set in the first two feet of the material as it was not run through the complete straightening cycle. At this time, this piece could be rerun and checked for straightness or a new piece could be cut and run and then be checked.

A good check is to guide the exiting material, keeping it parallel to the rolls, until the run is complete and then hold one end of the material in the air while peering down the length of the material. If the material still has "coil set" then readjust roll pressure on the last roll, towards the exit end but before the pinch roll, until the material is straight. Run one or more short length setups while making final adjustments. Once the proper setting has been determined, the quick release top maintains the adjustment during loading.

Thread the material from the reel through the straightener, under the dancer arm, and into the pulling device leaving ample loop between the straightener and the pulling device. If the material thickness is such that when exiting the straightener, it will not let the dancer arm down to the rest position, then either lengthen the dancer arm or adjust the loop height until the straightener stops feeding.

Set the % speed potentiometer to 50% for a starting position and start the pulling device to have the material feeding. If the straightener gets finished and stops before material is needed again then the straightener is set to feed too fast, slow it down by adjusting the % speed potentiometer. The ideal straightening is to have the straightener slightly exceed the feed rate required. This minimizes the starting and stopping and resultant stock deformation.

MAINTENANCE

Lubrication

Gear transmission
The reservoir oil capacity is about 4 oz. The reservoir oil should be changed every 2000 hours and should be filled to the oil level site gauge. Use MOBILE 600W cylinder oil or equivalent. This is a non-synthetic oil.

Rolls
Although the rolls should be cleaned periodically they never have to be greased as all the rolls have permanently lubricated bearings.

Drive belt
At the oil change interval, check for belt tension and wear.

TROUBLESHOOTING GUIDE

MAIN SWITCH ON BUT NOT LIT

1. CB tripped.
   a. Reset CB.
2. Unit not plugged into main power.
   a. Plug into main power source.
3. No power in incoming line.
   a. Check outlet.
   b. Check power cord.
4. Loose wiring.
   a. Check terminals and connections.

MOTOR CREEPS IN STOP POSITION

1. R1 & R3 pot on 69100034 board not correctly adjusted.
   a. Readjust pots so rollers stop. Call factory.

UNIT TURNS BUT WON'T JOG

1. Selector switch not in jog position.
   a. Select jog.
2. Jog pot on 69100076 board not adjusted correctly.
   a. Adjust pot. Call factory
3. Maximum speed pot on Ramm board set too low.
   a. Adjust pot.

UNIT ON BUT MOTOR WON'T RUN. (ARMATURE VOLTAGE PRESENT – ON RAMM BOARD)

1. Check motor wiring and fuse.
   a. Replace motor cord and correct motor wiring. Call factory.
2. Check motor.
   a. Worn brushes or motor defective. Call factory.

UNIT ON BUT MOTOR WON'T RUN. (NO ARMATURE VOLTAGE ON RAMM BOARD)

1. Selector switch not in run position.
   a. Turn selector switch to run position.
2. If running with a dancer arm control.
   a. Check that the external/loop switch is in the loop arm position.
3. If running with external control.
   a. Check that the external/loop arm switch is in the external position.
4. Height switch setting too high.
   a. Set height setting to "0".
5. Percent speed pot set too low.
   a. Adjust percent speed pot to 100%.
6. Fuses blown.
   a. Check fuses & circuit breaker.
7. No AC voltage at DC drive board.
   a. Check wiring.
8. Check Signal voltage between P2 to I2 on DC drive.
   0-6 VDC—Ramm
   0-9 VDC—Regen Drive
   while moving dancer arm.
   a. If there is a signal, check continuity between I1 & I2.
   b. If no continuity, replace D.C. drive or call factory.
9. Check line voltage input of 69100034 board, 120 VAC, TB-1.
   a. Check wiring. Call factory.
10. Check pico fuse 69100034 board (f1).
    a. Replace fuse, 1 amp pico fuse — call factory.
11. Check for 0-12 VDC between pin #1 (=V) and pin #2 (GND) of panduit connector TC3 on board #69100034.
    a. If no voltage present, call factory.
12. Check for DC voltage between pin #6 (VO) and pin #2 (GND) of panduit connector TC3, on board 69100034, while moving the dancer arm from minimum to maximum position.
    a. If voltage is present, turn power off and check the ribbon cable connections between panduit connector #TC3 of 69100034 board and panduit connector #TB-4 of 69100076 board. This should be a continuity check for tight connections. Call factory for assistance.
    b. If voltage is not present move on to step 13.
13. Check voltage between pin #5 of TB-6 & pin #3 of TB-5 on 69100076 board while moving the dancer arm from minimum to maximum position.
    a. If voltage varies 2.5-4 volt from minimum to maximum position, the dancer arm pot is OK, but the 69100076 board could be defective. Call factory.
    b. If voltage does not vary when moving the dancer arm from minimum to maximum position — call the factory for assistance.

69100034 TAUT STOCK OUTPUT

The 69100034—Proportional control board has a taut stock output. The output must be wired to a solid state relay as the max current draw is 20 MA. The solid state relay's contact can then be incorporated into the electrical control circuitry.

The output can be wired so that the relay is either on or off with the dancer arm down. When the dancer arm reaches the set point for taut stock, the relay switches state.

The taut stock height set point is set by raising the dancer arm to a position that the material is taut and then adjusting pot R7 so the output changes state. Lower and raise the dancer arm a few times to check that the set point repeats and then the set point repeats and then the task is finished.

The potentiometer that is located just below the taut stock terminal strip is used for presetting the max voltage output requirement for a particular drive. A RAMM DC drive needs 6 VDC for max motor speed so turn the pot fully counter clockwise. A minarik drive board needs 10 VDC for max motor speed so turn the pot fully clockwise.

The following is a brief wiring diagram for the taut stock.

3	GRD
2	10 VDC out with dancer arm down
1	0 VDC out with dancer arm down

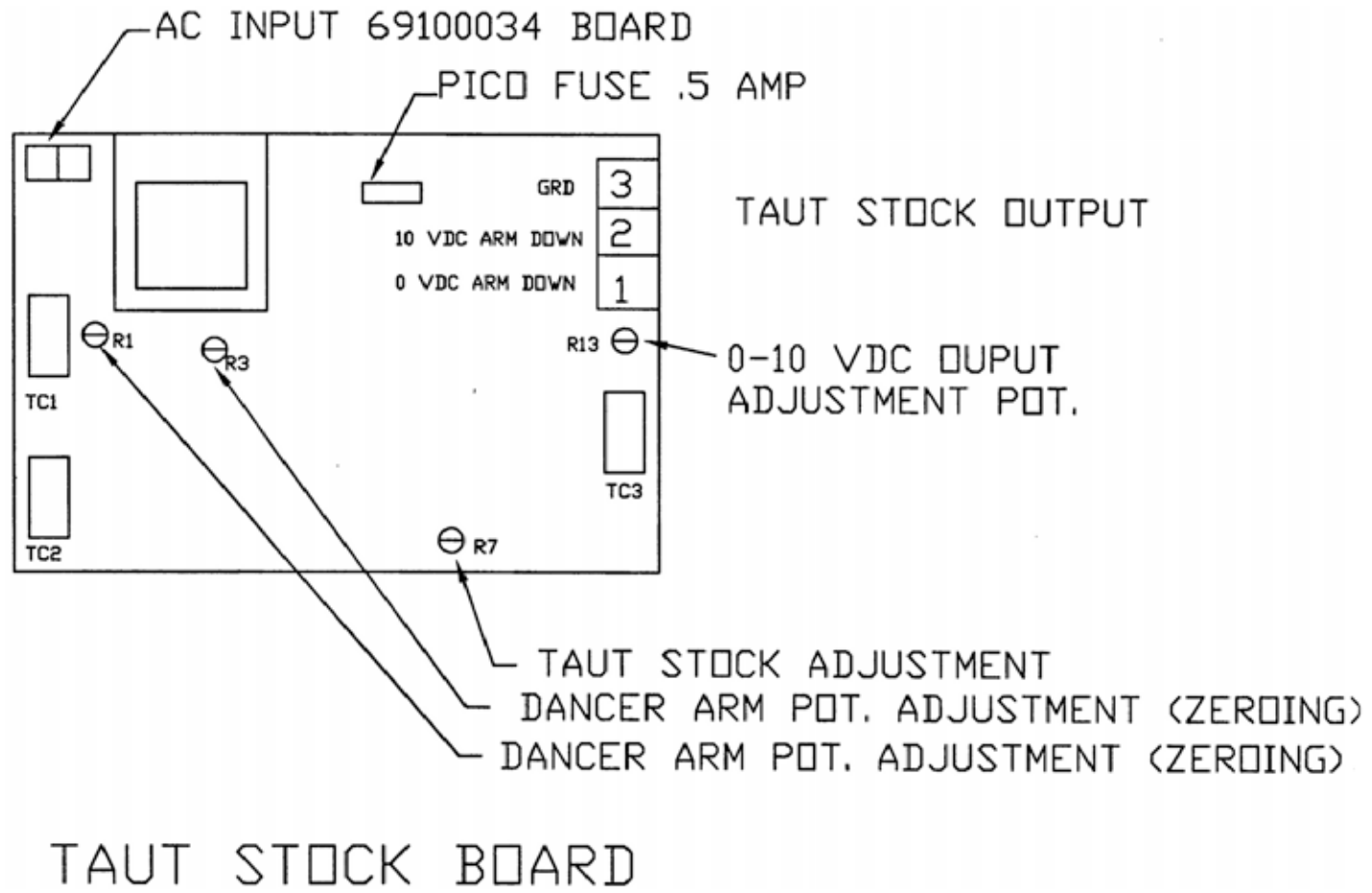

SAFETY WARNING – PLEASE READ CAREFULLY

RAMM Solid State DC Motor Speed Control

This product should be installed and serviced by a qualified technician, electrician or electrical maintenance personnel familiar with its operation and the hazards involved. Proper installation (see instruction information which accompanies product), which includes wiring, mounting in proper enclosure, fusing or other overcurrent protection and grounding, can reduce the chance of electrical shocks, fires or explosion in this product or products used with this product, such as electric motors, switches, coils solenoids and/or relays. Eye protection must be worn when working with control under power. This product is constructed of materials (plastics, metals, carbon, silicon, etc.) which may be a potential hazard. Individual material safety data sheets (MSDS) are available upon request. Proper shielding, grounding and filtering of this product can reduce the emission of radio frequency interference (RFI) which may adversely affect sensitive electronic equipment. If information is required on this product, contact our factory. It is the responsibility of the ultimate user of this product to read and comply with this safety warning. (SW effective 1/89)

*****IMPORTANT*****
YOU MUST READ THESE INSTRUCTIONS BEFORE OPERATING CONTROL

1. Be sure AC line voltage corresponds to control voltage.
2. Install the correct Plug-In Horsepower Resistor according to armature voltage and motor horsepower.
3. Recheck connections: AC line to L1 and L2; armature to A+ and A– and field (Shunt motors only to F+ and F-.) (**Note:** If motor runs in improper direction, interchange armature leads.)
4. Install proper AC line fuse and armature fuse as required.
5. Nominal trimpot settings are as follows (expressed in % of full CW rotation):

TABLE 1: NOMINAL TRIMPOT SETTINGS

MIN (minimum speed):	15%	CL (current limit/torque):	65%
MAX (maximum speed):	65%	ACCEL (acceleration start):	20%
IR (IR compensation):	25%	DECEL (deceleration stop):	20%

Plug-In Horsepower Resistor

A Plug-In Horsepower Resistor must be installed to match the RAMM to the motor horsepower and voltage. See table 2 for the correct value. Plug-In Horsepower Resistors are stocked by your distributor.

TABLE 2: PLUG-IN HORSEPOWER RESISTOR CHART*

MOTOR HORSEPOWER RANGE **		Plug-in Horsepower Resistor Resistance Value (ohms)	Rapid-Air Part Number
Armature Voltage 90-130 VDC	Armature Voltage 180 VDC		
1/4	1/2	.05	69100529
1/2	1	.025	69100530
3/4	1-1/2	.015	69100534
1***	2***	.01	69100531

* Motor horsepower and armature voltage must be specified when ordering so that proper resistor will be supplied.
** For overlapping motor horsepower range use lower value Plug-In Horsepower Resistor.
*** Auxiliary heat sink must be used to achieve HP rating.

INTRODUCTION

RAMM Full Wave Solid State DC Motor Speed Control

The **RAMM** Full Wave Solid State DC Motor Speed Control represents the latest state of the art design achievable through modern technology.

FEATURES INCLUDE:

Integrated Circuitry
Used to control and amplify command and reference levels with both closed and open loop feedback to provide superior motor regulation. (Speed changes due to load, line voltage, or temperature variations are held to minimum levels).

High Quality Components
Selected and tested for proven dependability.

Transient Protection
Used to prevent failure of the power bridge circuit caused by voltage spikes on the AC line.

High Reliability
When used in accordance with instructions in this manual, the RAMM will provide years of trouble free operation.

A. INITIAL SETUP AND WIRING

General Instructions

1. Install proper size Plug-In Horsepower Resistor (see table 2).

2. The RAMM can be connected to a standard 120V or 240V 50/60 Hz AC line (be sure the AC input voltage corresponds to the control voltage rating and the motor rating). (e.g. 90-130 VDC motor on 120VAC and 180 VDC motor on 240 VAC).

3. Follow the recommended supply wire sizes as per table 3.

4. Follow the NEC and other electrical codes that apply.

CAUTION: SEPARATE BRANCH PROTECTION MUST BE PROVIDED ON 240V CIRCUITS.

5. Connect control in accordance to connection diagram.

TABLE 3: MINIMUM SUPPLY WIRE SIZE REQUIREMENTS

Max. Motor Amps (DC Amps)	Max. Motor HP 90V	Max. Motor HP 180V	Max. Motor Run	Minimum Wire Size (AWG) Cu only Max. Motor Run
6.0	1/2	1	16	14
12.0	1	2	14	12*
16.0	1-1/2	3	12	12

* Maximum recommended wire size.

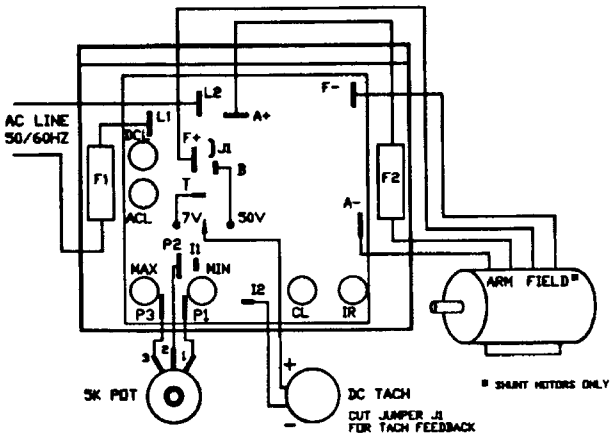

FIGURE 1: BASIC RAMM CONNECTION DIAGRAM

CAUTION: DO NOT BUNDLE POTENTIOMETER CONNECTIONS (P1, P2, P3) AND INHIBIT CONNECTIONS (I1, I2) WITH AC LINE OR MOTOR WIRES.

B. VOLTAGE FOLLOWING

All models can be controlled with an isolated analog reference voltage (0-6VDC) in lieu of the main speed potentiometer. The voltage is connected to P2 (+) and F-. The control output voltage will linearly follow the input voltage. The source impedance of the input should be 10K ohms or less. The Min trimpot can be used to provide an offset speed. If an offset is not required, adjust the Min to 0+ or 0– speed as desired. The Max trimpot is rendered inoperative in the voltage following mode. Use auxiliary trimpot to limit the control range. If the input signal is not isolated, or is a current signal (4-20 MA), the RASI240D Signal Isolator must be used. It will allow direct connection to process controllers and microprocessors.

CAUTION:

1. The voltage feeding P2 and F– must be isolated from the AC line. Do not ground P2 or F– to set up a zero ground reference.
2. Do not bundle signal wires to P2 and F– with AC line motor connections. If signal wires are over 18", use shielded cables.

C. FUSING

The RAMM has provision for a built in AC line fuse and armature fuse. The AC line fuse protects the control against catastrophic failure– if the fuse blows, the control is miswired, the motor is shorted or grounded, or the RAMM control is defective. The armature fuse provides overload protection for the motor and control. Choose the proper size armature fuse by multiplying the maximum DC motor amps by 1.7. On domestic 240 Volt AC lines, separate branch circuit protection for each line must be used. All fuses should be normal blow ceramic 3AG or ABC or equivalent.

1. AC Line Fuse is chosen according to the maximum rating of the control:

   – 12 AMP fuse for all motors up to 3/4 HP-90V and 1-1/2 HP-180VDC.
   – 25 AMP fuse for all motors 1 and 1-1/2 HP-90V and 2 and 3 HP-180VDC.

   (Use Buss ABC, Littlefuse 326 ceramic fuse or equivalent.)

2. Armature Fuse can be chosen in accordance with the fuse chart. **Note:** The armature fuse is calculated based on the approximate full load DC current rating of the motor times a form factor of 1.5. If motor has characteristics not consistent with these approximations, a different fuse value may have to be used. Fuses are available from your distributor.

TABLE 4: ARMATURE FUSE CHART

Horsepower 90 VDC Motor	Horsepower 180 VDC Motor	Approx. DC Motor Current (Amps)	Fuse Rating (AC Amps)
1/4	1/2	2.5	4
1/2	1	5.0	8
3/4	1-1/2	7.5	12*
1	2	10.0	15
1-1/2	3	15.0	25*

* Also used as AC line fuse.

ADJUSTMENTS AND CONTROL FUNCTIONS

RAMM Adjustments And Control Functions

WARNING: If adjustments are made under power, insulated adjustment tools must be used and eye protection must be worn.

The RAMM has been factory adjusted to provide 0-full speed using the speed control knob. Minimum and Maximum speed trimpots are provided to change the speed from other than 0-full speed. The Acceleration (ACCEL) trimpot is provided to allow for a smooth start over an adjustable time period each time the AC power is applied or the speed pot is rotated. The DECEL trimpot controls the amount of ramp-down when the speed pot is adjusted to a lower speed. The Current Limit (CL, or torque output) adjustment is factory set to approximately 1-1/2 times the motor rating. The IR Compensation (IR) is factory adjusted to provide excellent motor regulation under normal operation.

NOTE: In order for the IR comp and CL trimpot settings to be correct, the proper Plug-in Horsepower Resistor must be installed for the particular motor and input voltage being used. Do not attempt to change the settings of the trimpots unless absolutely necessary since they are factory adjusted to near optimum settings.

The following procedure, presented in order of adjustment sequence, should be used when readjusting all trimpot functions.

FIGURE 2: ACCEL/DECEL Trimpot ADJUSTMENT

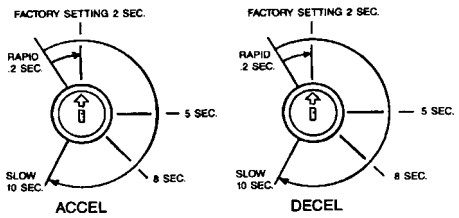

A. **Acceleration Start.** The ACCEL is factory set at approximately .2 seconds. To readjust to different times, set the knob to the desired position as indicated in Fig 2.

B. **Deceleration.** The DECEL is factory set to provide a ramp-down time of .2 seconds. To change the ramp-down time, adjust the DECEL trimpot as indicated in Fig 2.

C. **Minimum Speed Adjustment.** If a higher than zero minimum speed is desired, readjust the minimum speed by turning the speed control knob to zero setting (full CCW position). Then adjust the Min. Speed trimpot to the desired setting.

NOTE: The min. speed adjustment will affect the max. speed setting. Therefore, it is necessary to readjust the max. speed after the min. speed is adjusted.

D. **Maximum Speed Adjustment.** Turn Speed Control Knob to full speed (maximum CW position). Adjust max. speed trimpot to new desired setting.

NOTE: Do not attempt to adjust the max. speed above the rated motor RPM since unstable motor operation may occur. For moderate changes in the max. speed, there will be a slight effect on the min. speed setting.

E. **Current Limit (CL/Torque Adjustment).** CL circuitry is provided to protect the motor and control against overloads. The CL also limits the inrush current to safe level during startup. The CL is factory set to approximately 1.5 times the full load rating of the motor. (CL trimpot is nominally set to approximately 65% of full CW rotation).

To set the CL to factory specifications adjust as follows:

1. Set speed control knob at approximately 30-50% CW rotation. Set CL trimpot to full CCW position.
2. Connect a DC ammeter in series with the armature lead.
3. Lock shaft of motor (be sure CL pot is in full CCW position).

Apply power and rotate CL pot CW slowly until DC ammeter reads 1.5 times motor rating (do not exceed 2 times motor rating, Max. CW position.)

NOTE: If only an AC ammeter is available, it can be installed in series with the AC line. Follow above instructions; however, set AC amperage at .75 times motor rating.

F. **IR Compensation Adjustment.** IR compensation is provided to substantially improve load regulation. If the load presented to the motor does not vary substantially, the IR adjustment may be set at a minimum level (approximately 1/4 of full setting). The control is factory adjusted to approximately 3% regulation. If superior performance is desired (less than 1% speed change of base speed from 0 to full load), then the IR comp. Should be adjusted as follows:

NOTES: 1. Excessive IR comp. will cause control to become unstable, which causes motor cogging.
2. For tach feedback applications the IR comp can be set to minimum rotation (full CCW).

1. Set IR comp. trimpot at approximately 25% of CW rotation. Run motor unloaded at approximately 1/3 speed and record RPM.
2. Run motor with maximum load and adjust IR comp. trimpot so that the motor speed under load equals the unloaded speed per step 1.
3. Remove load and recheck unloaded RPM. If unloaded RPM has shifted, repeat procedure for more exact regulation.

The RAMM is now compensated to provide minimal speed change under large variations of applied load.

WARRANTY

Limited Warranty – RAMM 125, 225, 225D

For a period of one (1) year from date of original purchase Rapid-Air Corporation will repair or replace without charge devices which our examination proves to be defective in material or workmanship. This warranty is valid if the unit has not been tampered with by unauthorized persons, misused, abused or improperly installed and has been used in accordance with the instructions and/or ratings supplied. The foregoing is in lieu of any other warranty or guarantee expressed or implied, and we are not responsible for any expense (including installation and removal), inconvenience, or consequential damage, including injury to any person, caused by items of our manufacture and/or sale. Some states do not allow certain exclusions or limitations found in this warranty so that they may not apply to you. In any event, Rapid-Air Corporation's total liability, under all circumstances, shall not exceed the full purchase price of this unit.

Wiring Diagram for STD Speed Straighteners (1-HP)

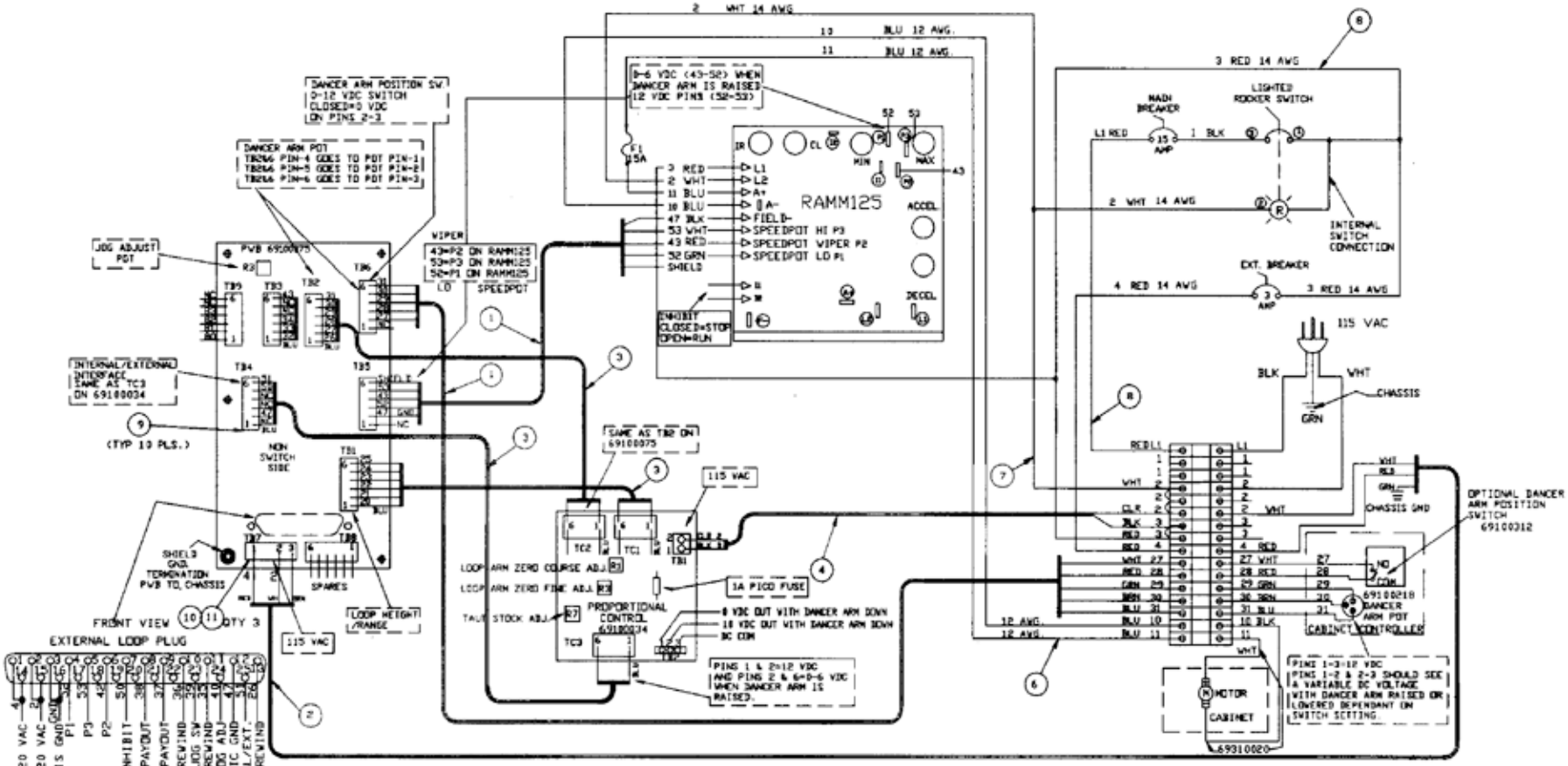

Wiring Diagram for High Speed Straighteners (3-HP)

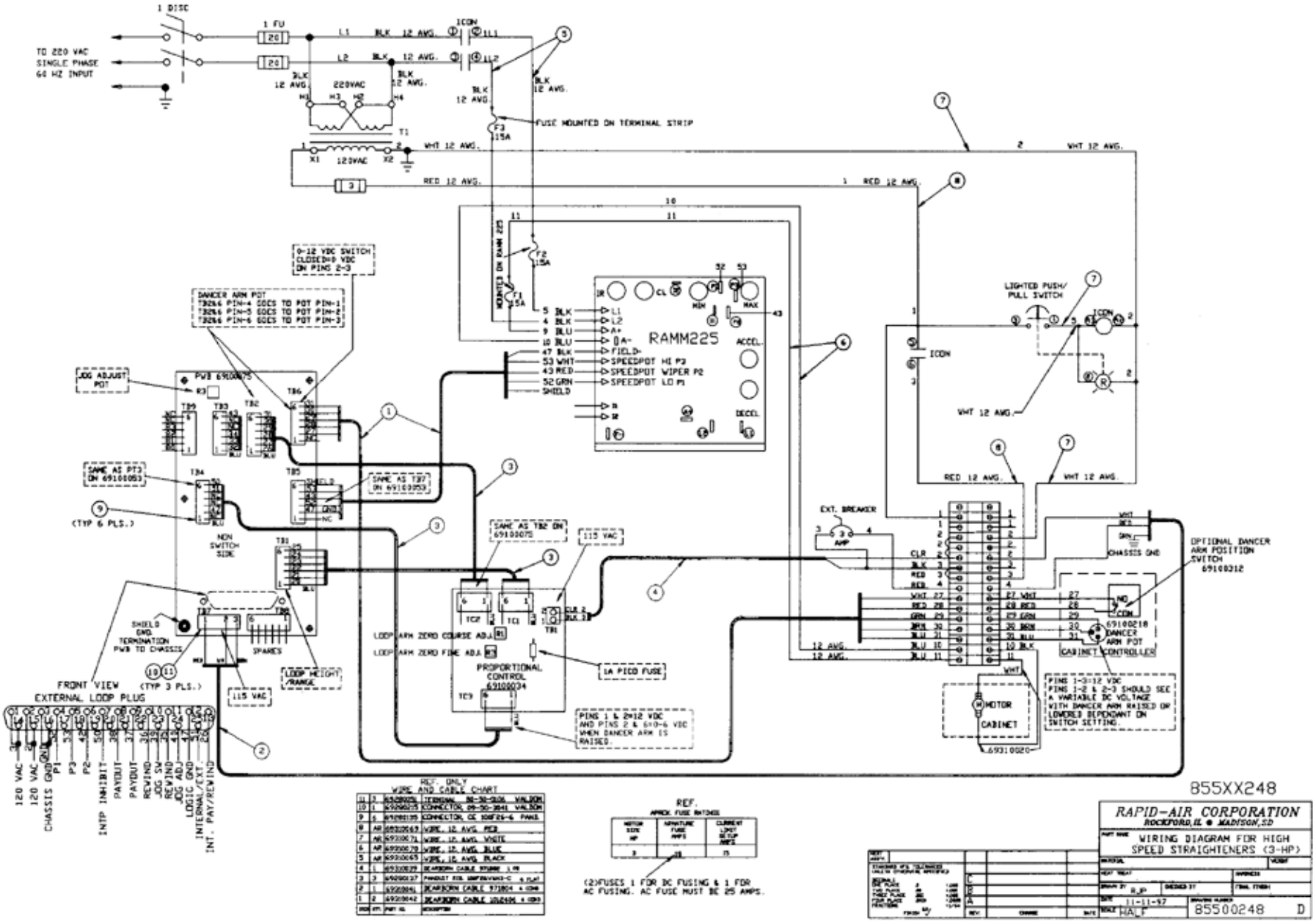

Wiring Diagram for Medium Speed Straighteners (2-HP)

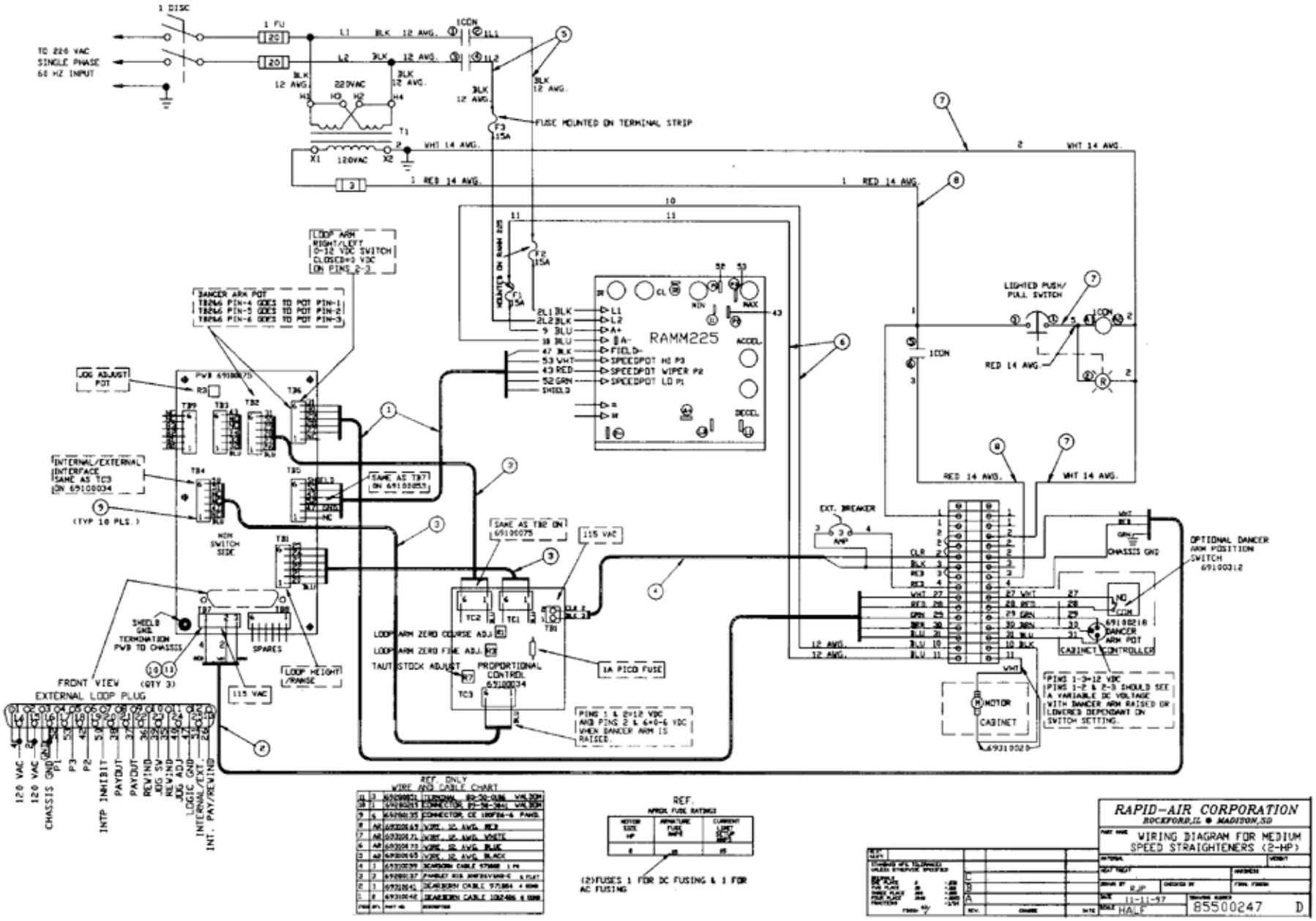

Standard Speed SBX Series 4" Straightener

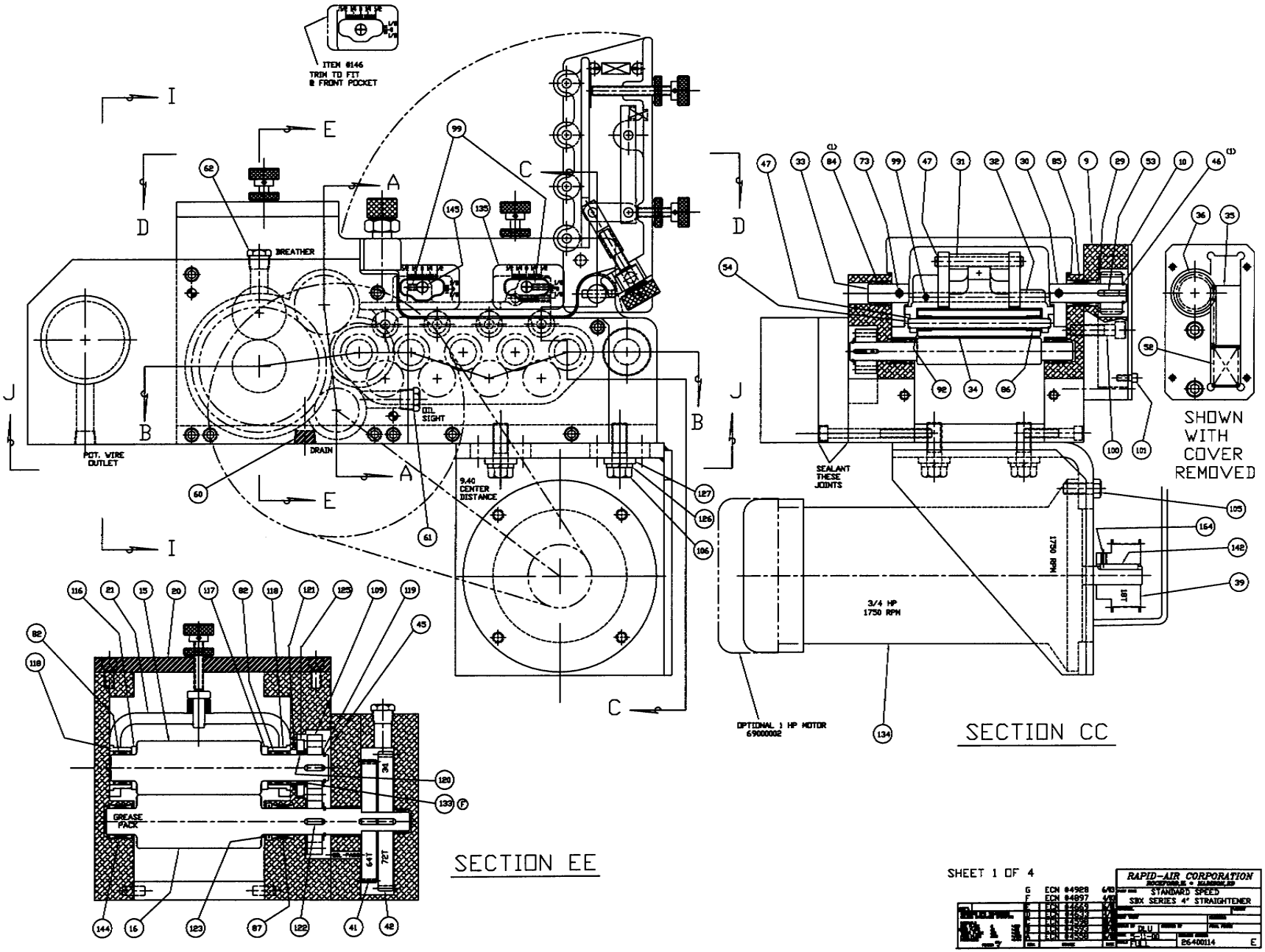

Standard Speed SBX Series 4" Straightener

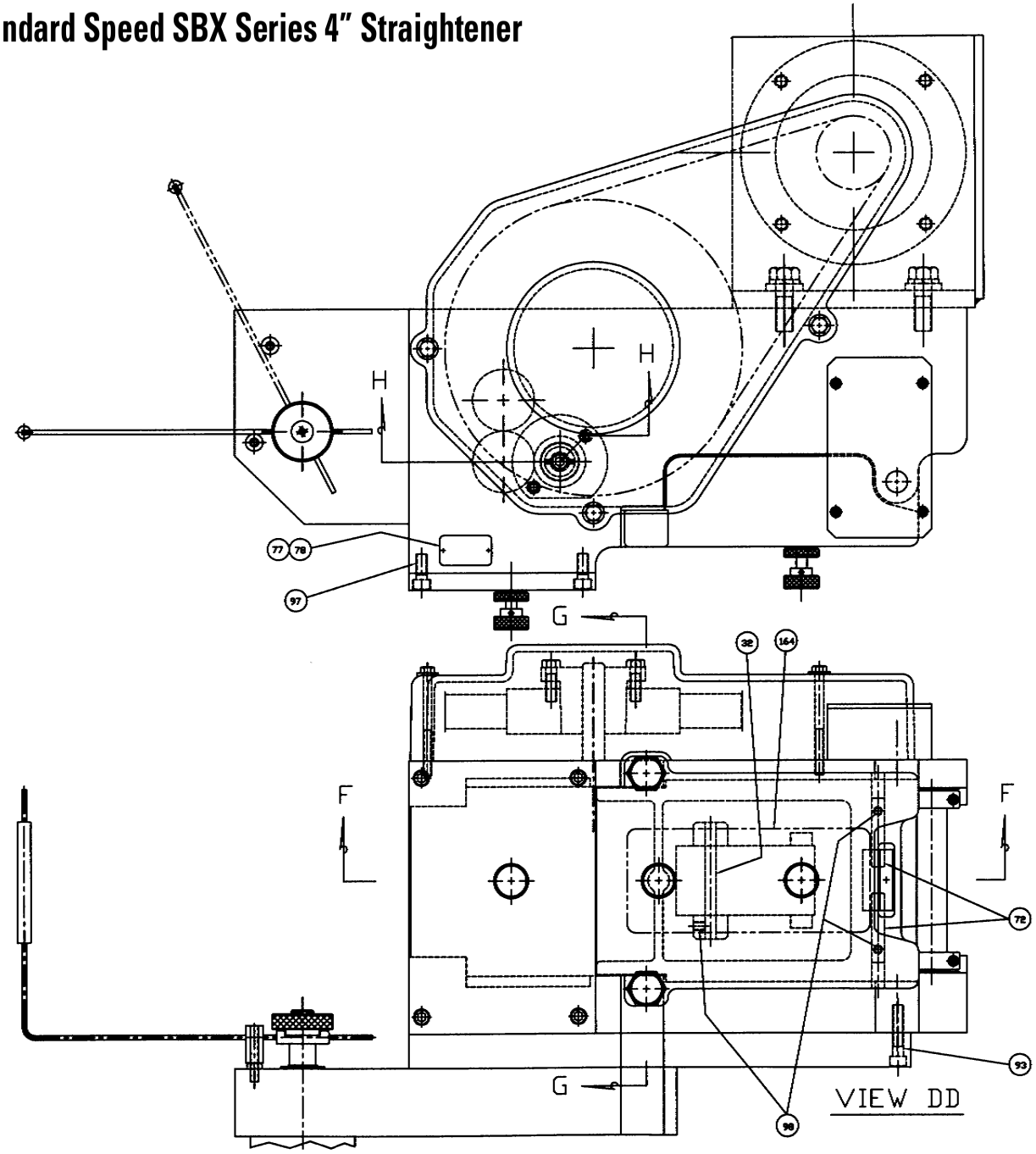

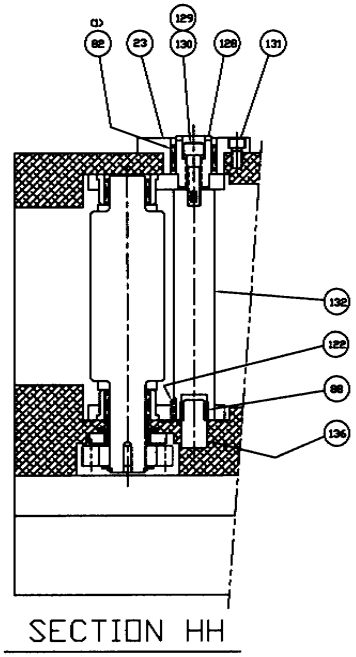

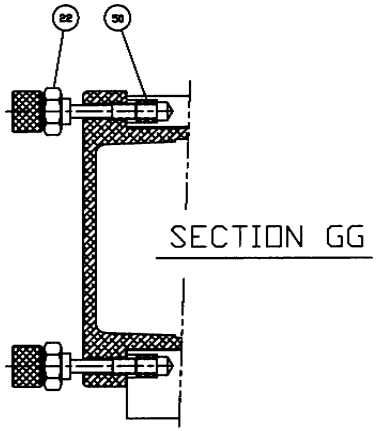

SHEET 2 OF 4

RAPID-AIR CORPORATION
ROCKFORD, IL • MANSFIELD
STANDARD SPEED
SBX SERIES 4" STRAIGHTENER
26400114
E

Standard Speed SBX Series 4" Straightener

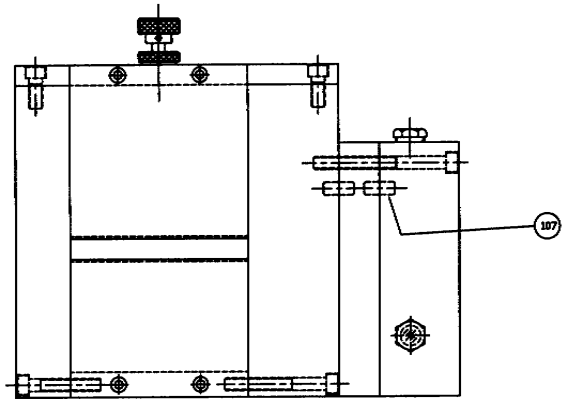

VIEW II

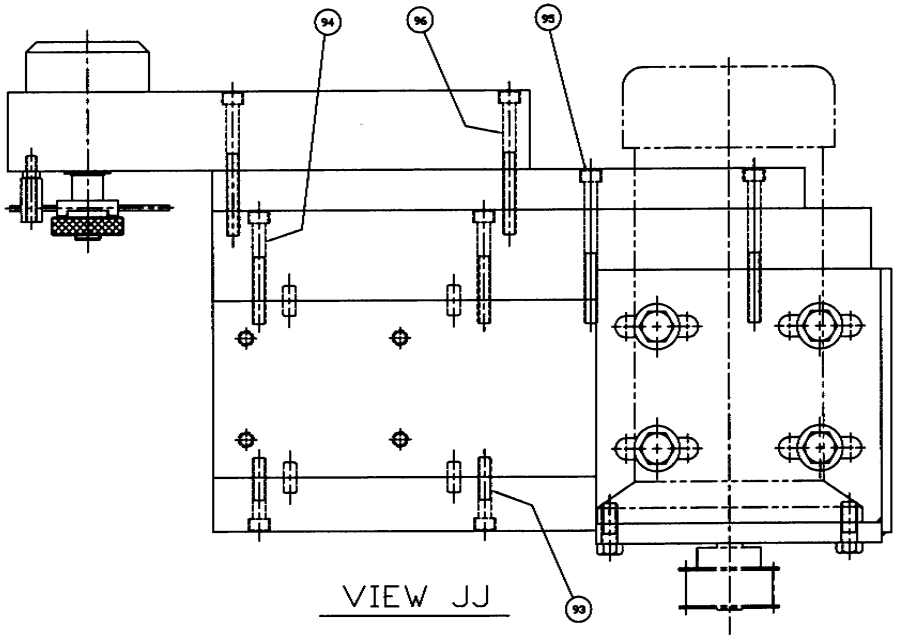

VIEW JJ

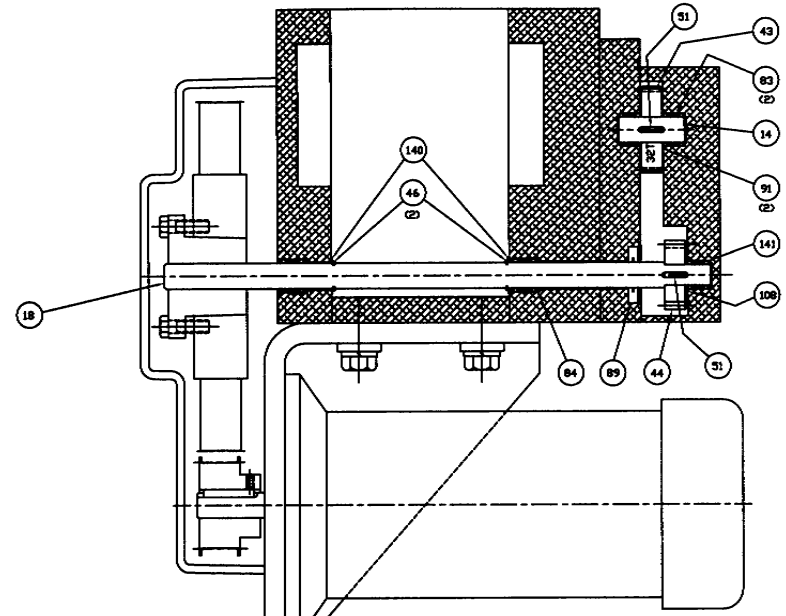

SECTION AA

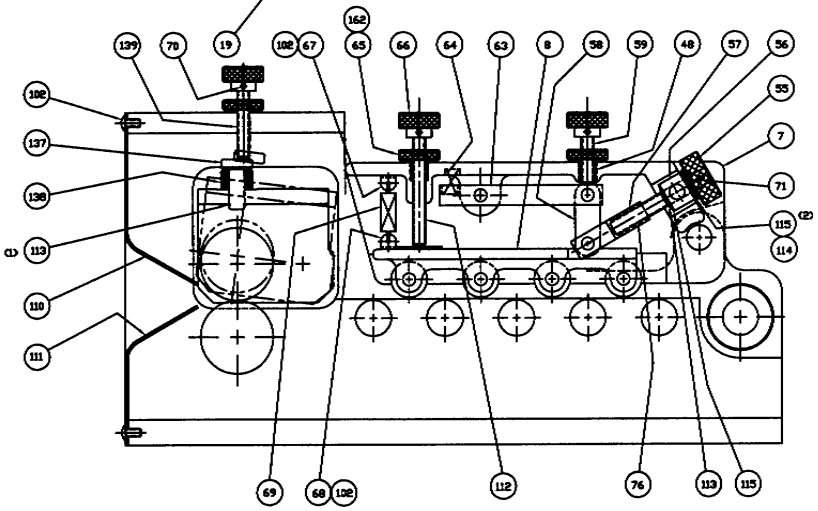

SECTION FF

SHEET 3 OF 4

	G	ECN 84928	6/10	
	F	ECN 84827	4/10	
	E	ECN 84463	3/10	
	D	ECN 84347	2/10	
	C	ECN 84098	1/10	
	B	ECN 83997	12/09	
	A	ECN 83968	11/09	
	REV	REVISIONS	DATE	

RAPID-AIR CORPORATION
ROCKFORD, IL • MANSFIELD

STANDARD SPEED
SBX SERIES 4" STRAIGHTENER

DRAWN BY: D.L.U. | CHECKED BY | TOTAL PAGES
DATE: 4-12-00 | SHEET NUMBER
FILE:
26400114 E

Standard Speed SBX Series 4" Straightener

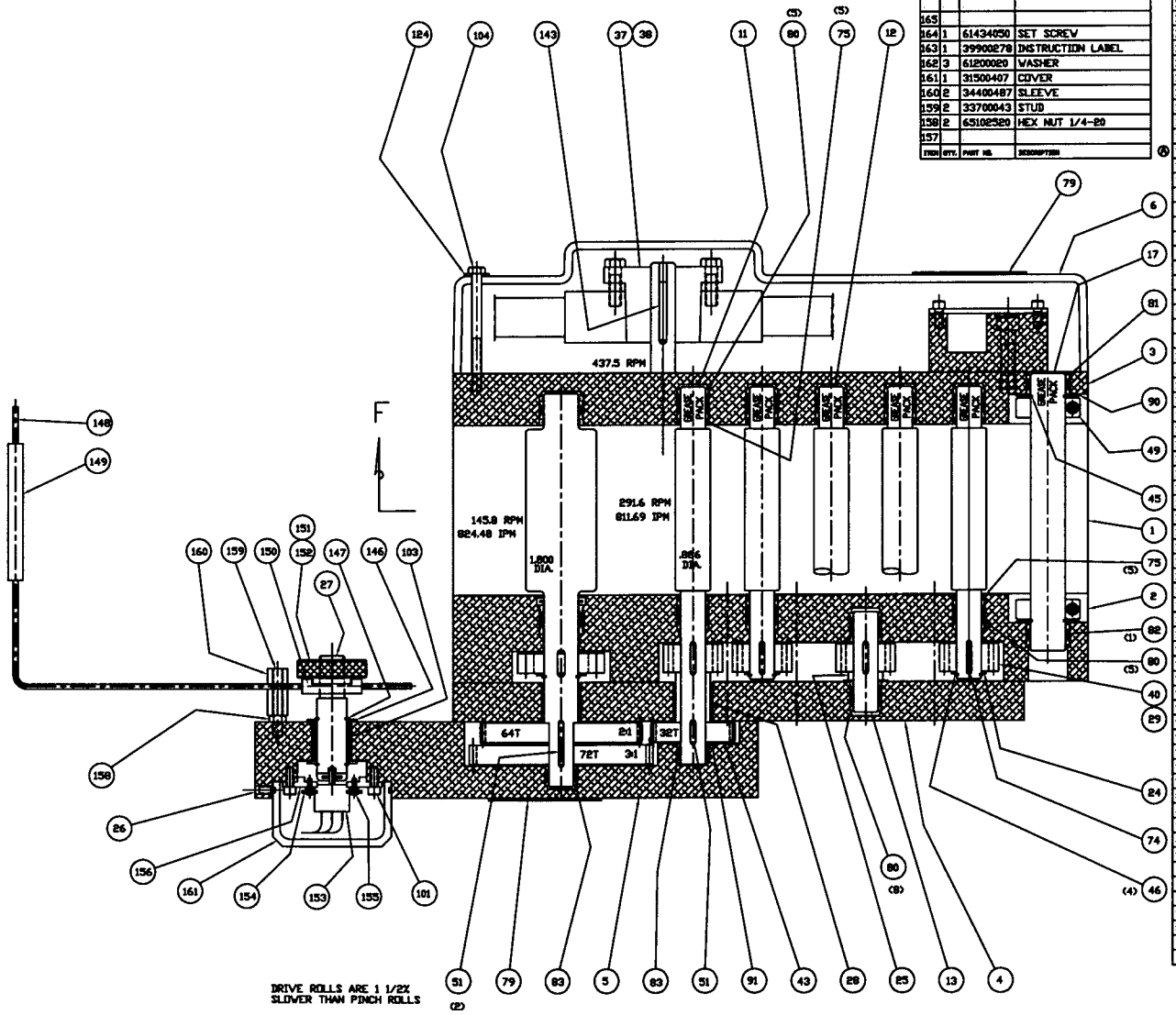

SECTION BB

SHEET 4 OF 4

ITEM	QTY.	PART NO.	DESCRIPTION
165			
164	1	61434050	SET SCREW
163	1	39900278	INSTRUCTION LABEL
162	3	61200020	WASHER
161	1	31500407	COVER
160	2	34400487	SLEEVE
159	2	33700043	STUD
158	2	65102520	HEX NUT 1/4-20
157			
156	1	32900705	POT. MTG. SHAFT
155	2	66004038	RHMS #4-40 X 3/8
154	2	69400009	MOTOR CLEAT
153	1	69100218	POT. ASSEMBLY
152	1	34700052	WASHER
151	1	36200016	NUT CLAMP
150	1	34600038	ADAPTOR
149	1	34300056	DANCER ROLLER
148	1	33600142	DANCER
147	2	60910075	RETAINING RING
146	2	64520018	THRUST WASHER
145	2	33801019	LOCATING PIN
144	1	64500063	NEEDLE BRG. JTT-1414
143	1	36800019	KEY 3/16 X 1 1/2
142	1	36800013	KEY 3/16 X 1 1/4
141	1	64500015	NEEDLE BRG. B-88
140	2	34700051	WASHER
139	1	36100088	ADJUSTING SCREW
138	8	37500027	SPRING WASHER
137	1	32900636	SPRING RETAINER SHAFT
136	1	32900734	SHAFT
135	2	39900277	LABEL
134	1	69000030	MOTOR 3/4 HP
133	1	67410015	WAVE WASHER
132	1	32900733	SPACER SHAFT
131	2	65920050	SHCS 1/4-20 X 1/2
130	1	61320031	LOCKWASHER 5/16
129	1	66700064	SHCS 5/16-24 X 1 1/4 VALDERWELL
128	1	32900685	ECCENTRIC SHAFT
127	4	69400068	THICK WASHER 1/2"
126	4	61300050	LOCKWASHER 1/2"
125	1	31701842	SEAL PLATE
124	3	61200019	FLAT WASHER 1/4"
123	1	60200066	OIL SEAL - NATIONAL #59765
122	3	62318050	DOWEL PIN
121	1	60108218	"O" RING
120	1	60108212	"O" RING
119	4	34700110	SPACER
118	2	33900255	NEEDLE BRG. BUSHING
117	1	34100288	SPACER
116	1	34100283	SPACER
115	3	64520010	THRUST WASHER
114	1	67410008	WAVE WASHER
113	2	60910037	RETAINING RING
112	1	33700016	STUD
111	1	31400479	LOWER FRONT GUARD
110	1	31400478	UPPER FRONT GUARD
109	2	32602600	GEAR OMED
108	1	64520012	THRUST WASHER
107	8	62331075	DWL PIN 5/16 X 3/4
106	4	65853150	HEX BOLT 1/2-13 X 1 1/2
105	4	65836100	HEX BOLT 3/8-16 X 1
104	3	65820300	HEX BOLT 1/4-20 X 3" LG.
103	1	64100043	BUSHING #AA-1005-7
102	8	66612037	BHSCS #10-32 X 3/8
101	6	65912050	SHCS #10-32 X 1/2
100	2	65936150	SHCS 3/8-16 X 1 1/2
99	3	66212025	SET SCREW
98	3	66220025	SET SCREW
97	4	65931075	SHCS 5/16-18 X 3/4
96	4	65931325	SHCS 5/16-18 X 3 1/4
95	2	65931350	SHCS 5/16-18 X 3 1/2
94	2	65931250	SHCS 5/16-18 X 2 1/2
93	5	65931150	SHCS 5/16-18 X 1 1/2
92	8	34700064	THRUST WASHER
91	10	64520008	THRUST WASHER
90	2	64520022	THRUST WASHER
89	1	60200009	OIL SEAL C/R #6373
88	1	64500062	NEEDLE BRG. JTT-87
87	1	64500008	NEEDLE BRG. B-1412
86	8	64500041	NEEDLE BRG. JTT-59
85	1	64500051	NEEDLE BRG. JTT-1014
84	3	64500057	NEEDLE BRG. JTT-1012
83	4	64500002	NEEDLE BRG. B-108
82	4	64500061	NEEDLE BRG. JTT-1410
81	1	64500005	NEEDLE BRG. B-148
80	18	64500003	NEEDLE BRG. B-1012
79	2	39900245	RAPID-AIR LOGO
78	2	66300250	DRIVE SCREW
77	1	39900051	NAME PLATE
76	1	33700017	HORZ. ADJ. SCREW
75	10	60200043	OIL SEAL
74	9	33801018	DOWEL PIN
73	2	62225100	PULL DOWEL
72	2	62237200	PULL DOWEL
71	1	62412125	ROLL PIN
70	3	62412062	ROLL PIN
69	2	37500050	SPRING
68	1	31900415	BOTTOM SPRING ANCHOR
67	1	31900414	TOP SPRING ANCHOR
66	3	36700017	ADJ. KNOB
65	3	36200018	KNURLED LOCKNUT
64	2	37500040	SPRING
63	1	31701852	UPPER LINK
62	1	69420010	BREATHER
61	1	67700001	OIL SIGHT
60	1	63130375	PIPE PLUG 3/8 NPT
59	1	33700015	STUD
58	2	31701851	LINK
57	1	31900421	HORZ. ADJ. BLOCK
56	1	31900420	PIVOT BLOCK
55	1	36700018	ADJ. KNOB
54	4	32900301	IDLER SHAFT
53	1	36800005	KEY
52	1	37500051	SPRING
51	5	36800030	KEY
50	2	65600004	THREADED INSERT
49	2	34300090	COLLAR (STAFFORD #7L014)
48	2	65600007	THREADED INSERT
47	10	60910031	RETAINING RING
46	7	60910062	RETAINING RING
45	4	60910067	RETAINING RING
44	1	32600210	SPUR GEAR 24T
43	2	32600209	SPUR GEAR 32T
42	1	32600208	SPUR GEAR 72T
41	1	32600207	SPUR GEAR 64T
40	9	32602000	GEAR
39	1	32500017	PULLEY
38	1	32500016	PULLEY W/QD BUSHING
37	1	32500015	TIMING BELT
36	1	32600034	PINNION
35	1	32600109	RACK
34	4	34200270	IDLER ROLLER
33	1	32900741	PIVOT SHAFT
32	2	32900303	HINGE PIN
31	1	32900302	HINGE PIN
30	1	32900742	PIVOT SHAFT
29	11	34700033	SPACER
28	1	34400486	SPACER
27	1	32900759	DANCER SHAFT
26	1	66700066	[illegible]
25	4	34100287	SPACER
24	4	34100284	SPACER
23	1	30100234	ECC. BRG. HOUSING
22	2	32900743	KNOB SHAFT
21	1	31900602	ROLLER BRACKET
20	1	31701874	TOP PLATE
19	1	21900210	MOTOR MTG. BRKT.
18	1	32900758	MOTOR DRIVE SHAFT
17	1	32900740	GUIDE SHAFT
16	1	34200279	LOWER ROLLER
15	1	34200266	UPPER ROLLER
14	1	32900757	IDLER SHAFT
13	4	32900737	IDLER ROLLER
12	4	34200267	LOWER ROLLER
11	1	32900736	LOWER DRIVE SHAFT
10	1	31400462	RACK HSG. COVER
9	1	30100228	RACK HOUSING
8	1	30100227	PLATTEN HOUSING
7	1	30100226	TOP COVER HOUSING
6	1	30100233	BELT COVER HOUSING
5	1	31701872	GEAR COVER PLATE
4	1	31701871	GEAR SPACER PLATE
3	1	31701870	L.H. SIDE PLATE
2	1	31701869	R.H. SIDE PLATE
1	1	31701868	BASE PLATE

RAPID-AIR CORPORATION
ROCKFORD, ILLINOIS

STANDARD SPEED
SBX SERIES 4" STRAIGHTENER

G ECN 04928 6/02
F ECN 04897 4/02

DLU 4-12-00
FULL 26400114 E

SCX-6 Straightener Standard Speed

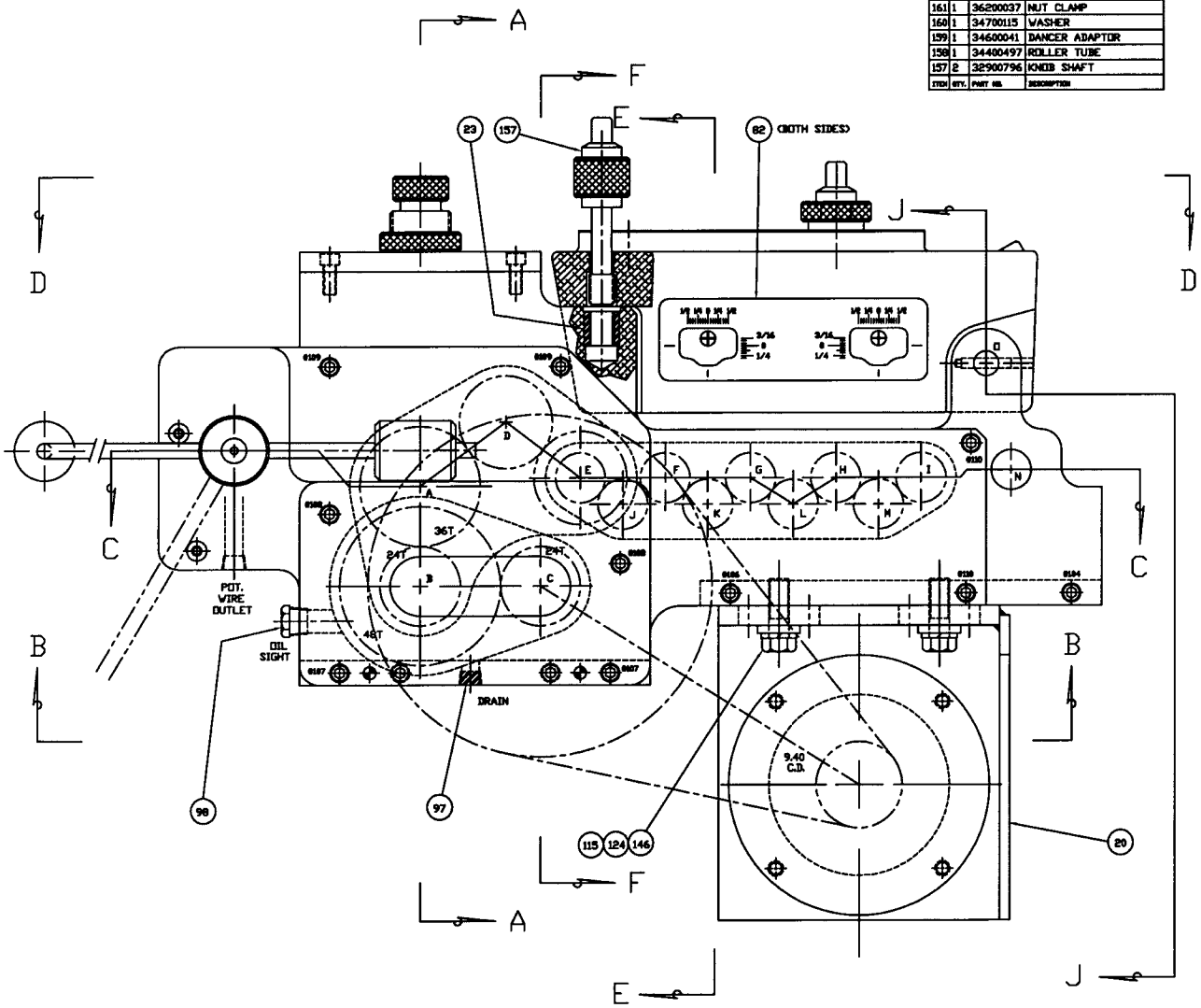

ITEM	QTY.	PART NO.	DESCRIPTION
169			
168			
167			
166			
165			
164	1	61434050	SET SCREW
163	4	64520022	THRUST WASHER
162	1	31701920	ADJ. SCREW RET. PLATE
161	1	36200037	NUT CLAMP
160	1	34700115	WASHER
159	1	34600041	DANCER ADAPTOR
158	1	34400497	ROLLER TUBE
157	2	32900796	KNOB SHAFT
ITEM	QTY.	PART NO.	DESCRIPTION

ITEM	QTY.	PART NO.	DESCRIPTION
156	1	34100297	SPACER
155	1	32900795	PIVOT SHAFT
154	1	31701919	OIL SEAL PLATE
153	2	33900258	NEEDLE BRG. BUSHING
152	1	67410015	WAVE WASHER
151	1	21100061	WRENCH ASSEMBLY
150	1	36200031	LOCKNUT
149	1	36100078	ADJ. SCREW
148	1	69000002	MOTOR 1 HP
147	3	61200019	FLAT WASHER 1/4"
146	4	61300050	LOCK WASHER 1/2"
145	1	32900685	ECCENTRIC SHAFT
144	1	60108220	"O" RING
143	1	60108212	"O" RING
142	2	62318087	DOWEL PIN 3/16 X 7/8
141	4	34700110	SPACER
140	4	33801020	LOCATING PIN
139	2	60200055	OIL SEAL NATIONAL #343098
138	1	30100233	BELT COVER HOUSING
137	1	33600215	DANCER ARM
136	2	65102520	HEX NUT 1/4-20
135	2	34400487	SLEEVE
134	2	33700043	STUD
133	2	69400009	MOTOR CLEAT
132	1	69100218	POT. ASS'Y.
131	1	32900705	POT. MTG. SHAFT
130	1	31500407	COVER
129	2	64520018	THRUST WASHER
128	1	30100243	ECC. BRG. HSG.
127	1	31400494	UPPER FRONT GUARD
126	1	31400493	LOWER FRONT GUARD
125	1	64100067	BUSHING #AA-1049-9
124	4	69400068	THICK WASHER
123	1	61200022	FLAT WASHER 5/16
122	1	61320031	LOCKWASHER 5/16
121	2	66004038	RHMS #4-40 X 3/8
120	5	66212025	SET SCREW
119	3	66220025	SET SCREW
118	2	65920075	SHCS 1/4-20 X 3/4
117	3	65820300	SHCS 1/4-20 X 3
116	6	66612037	BHSCS #10-32 X 3/8
115	4	65853150	HEX BOLT 1/2-13 X 1 1/2
114	4	65836100	HEX BOLT 3/8-16 X 1
113	1	65931050	SHCS 5/16-18 X 1/2
112	1	66700064	BHCS 5/16-24 X 1 1/4 W/LOCWELL
111	4	65931075	SHCS 5/16-18 X 3/4
110	2	65931125	SHCS 5/16-18 X 1 1/4
109	2	65931350	SHCS 5/16-18 X 3 1/2
108	2	65931100	SHCS 5/16-18 X 1
107	2	65931450	SHCS 5/16-18 X 4 1/2
106	1	65931425	SHCS 5/16-18 X 4 1/4
105	1	32600215	SPUR GEAR 12P 24T
104	3	65931300	SHCS 5/16-18 X 3
103	4	65931200	SHCS 5/16-18 X 2
102	6	65912050	SHCS #10-32 X 1/2
101	2	65936150	SHCS 3/8-16 X 1 1/2
100	1	66700066	HALF DOG POINT SET SCREW
99	1	69420010	BREATHER
98	1	67700001	OIL SIGHT
97	1	63130375	PIPE PLUG 3/8 NPT
96	4	64500063	NEEDLE BRG JTT-1414
95	22	64520008	THRUST WASHER
94	2	64520017	THRUST WASHER
93	1	64500008	NEEDLE BRG. B-1412
92	7	60200068	OIL SEAL C/R #621
91	1	64500051	NEEDLE BRG. JTT-1014
90	1	64500061	NEEDLE BRG. JTT-1410
89	2	64500038	NEEDLE BRG. B-1612
88	2	64500057	NEEDLE BRG. JTT-1012
87	1	32900794	IDLER SHAFT
86	2	65920125	SHCS 1/4-20 X 1 1/4
85	15	64500018	NEEDLE BRG. B-1010
84	20	64500064	NEEDLE BRG. B-1410
83	1	39900281	INSTRUCTION LABEL
82	1	39900280	PLATEN ADJUST. LABEL
81	2	39900245	LOGO
80	2	66300250	DRIVE SCREW
79	1	39900051	NAME PLATE
ITEM	QTY.	PART NO.	DESCRIPTION

ITEM	QTY.	PART NO.	DESCRIPTION
78	20	60200067	OIL SEAL C/R #0619
77	9	33801018	DOWEL PIN
76	10	62331075	DOWEL PIN
75	2	62225100	PULL DOWEL
74	2	62237250	JERGENS PULL DOWEL #31734
73	4	65920075	SHCS 1/4-20 X 3/4
72	2	34300093	COLLAR STAFFORD #1L100
71	1	31701918	WEAR PLATE
70	8	36100098	SPRING ANCHOR
69	3	36200036	LOCKNUT
68	1	36100089	ADJUSTING SCREW
67	1	36100091	ADJUSTING SCREW
66	1	36100090	ADJUSTING SCREW
65	1	31701917	UPPER LINK PLATE
64	2	31701916	LINK
63	1	31701915	HORZ. ADJ. PLATE
62	1	31701914	PIVOT BLOCK
61	1	31701922	ADJ. SCREW RETAINING PLATE
60	4	32900793	ROLLER SHAFT
59	1	37500145	SPRING
58	8	34100296	WASHER
57	4	37500144	EXTENSION SPRING
56	1	37500146	SPRING
55	1	36800019	KEY
54	1	36800013	KEY
53	1	36800005	KEY
52	6	36800021	KEY 3/16 X 3/4
51	2	34300094	THREADED INSERT
50	2	60910075	RETAINING RING
49	2	60910037	RETAINING RING
48	20	60910087	RETAINING RING
47	4	62419125	ROLL PIN
46	6	60910068	RETAINING RING
45	2	60910100	RETAINING RING
44	2	32602800	GEAR (NTE)
43	2	32600214	SPUR GEAR 12P 28T
42	1	32600213	SPUR GEAR 12P 36T
41	1	32600212	SPUR GEAR 12P 24T
40	1	32600211	SPUR GEAR 12P 48T
39	9	32602000	GEAR
38	1	32500017	PULLEY
37	1	32500020	PULLEY & QD BUSHING
36	1	32500015	TIMING BELT
35	1	32600034	PINNION
34	1	32600109	RACK
33	4	34200290	IDLER ROLLER
32	1	32900792	PIVOT SHAFT
31	1	32900791	HINGE PIN
30	1	32900790	HINGE PIN
29	1	32900789	HINGE PIN
28	1	32900788	PIVOT SHAFT
27	2	34700033	SPACER
26	1	32900797	DANCER SHAFT
25	4	34100287	SPACER
24	15	64520020	THRUST WASHER
23	2	65600006	THREADED INSERT
22	1	21900217	ROLLER BRACKET ASS'Y.
21	1	31701911	TOP PLATE
20	1	21900210	MOTOR MTG. BRACKET
19	1	32900787	MOTOR DRIVE SHAFT
18	1	32900786	GUIDE SHAFT
17	1	34200289	LOWER ROLLER
16	1	34200288	UPPER ROLLER
15	1	32900785	IDLER SHAFT
14	4	32900737	IDLER SHAFT
13	4	34200287	LOWER ROLLER
12	1	32900784	LOWER DRIVE SHAFT
11	1	31500412	RACK HOUSING COVER
10	1	30100242	RACK HOUSING
9	1	30100240	PLATEN HOUSING
8	1	30100239	TOP COVER HOUSING
7	1	31701912	GEAR COVER PLATE
6	1	30100241	GEAR HOUSING
5	1	31701910	GEAR SPACER PLATE
4	1	31701909	L.H. SIDE PLATE
3	1	31701908	R.H. SIDE PLATE
2	1	31701907	REAR BASE PLATE
1	1	31701906	FRONT BASE PLATE
ITEM	QTY.	PART NO.	DESCRIPTION

SHEET 1 OF 6

RAPID-AIR CORPORATION
ROCKFORD, ILLINOIS

SCX-6 STRAIGHTENER
STANDARD SPEED (0-825 IPM)

26400120 E

SCX-6 Straightener Standard Speed

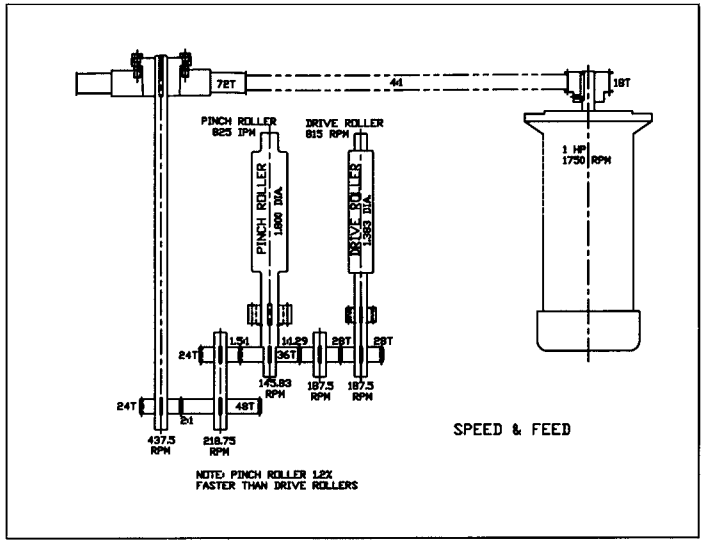

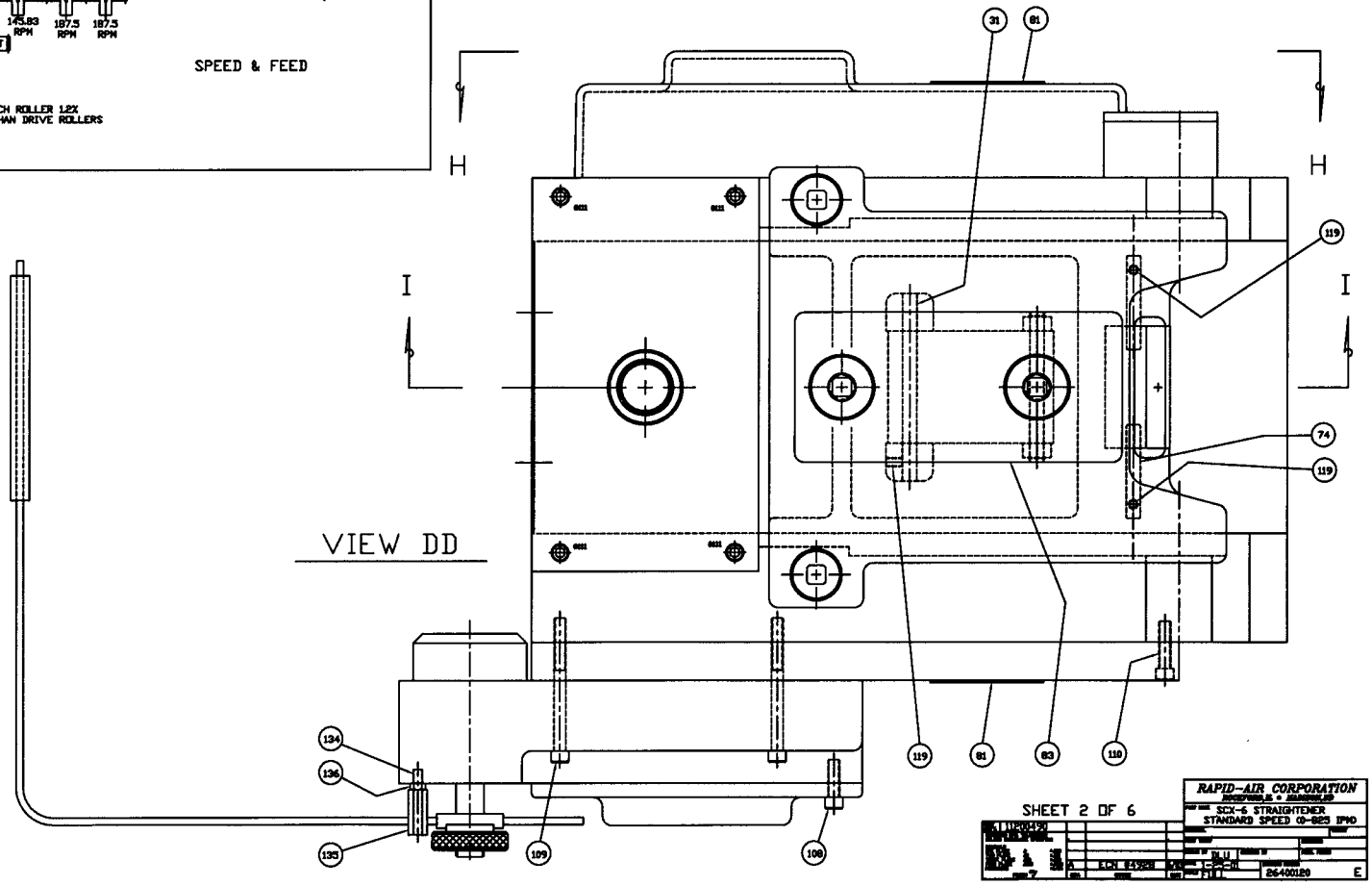

SCX-6 Straightener Standard Speed

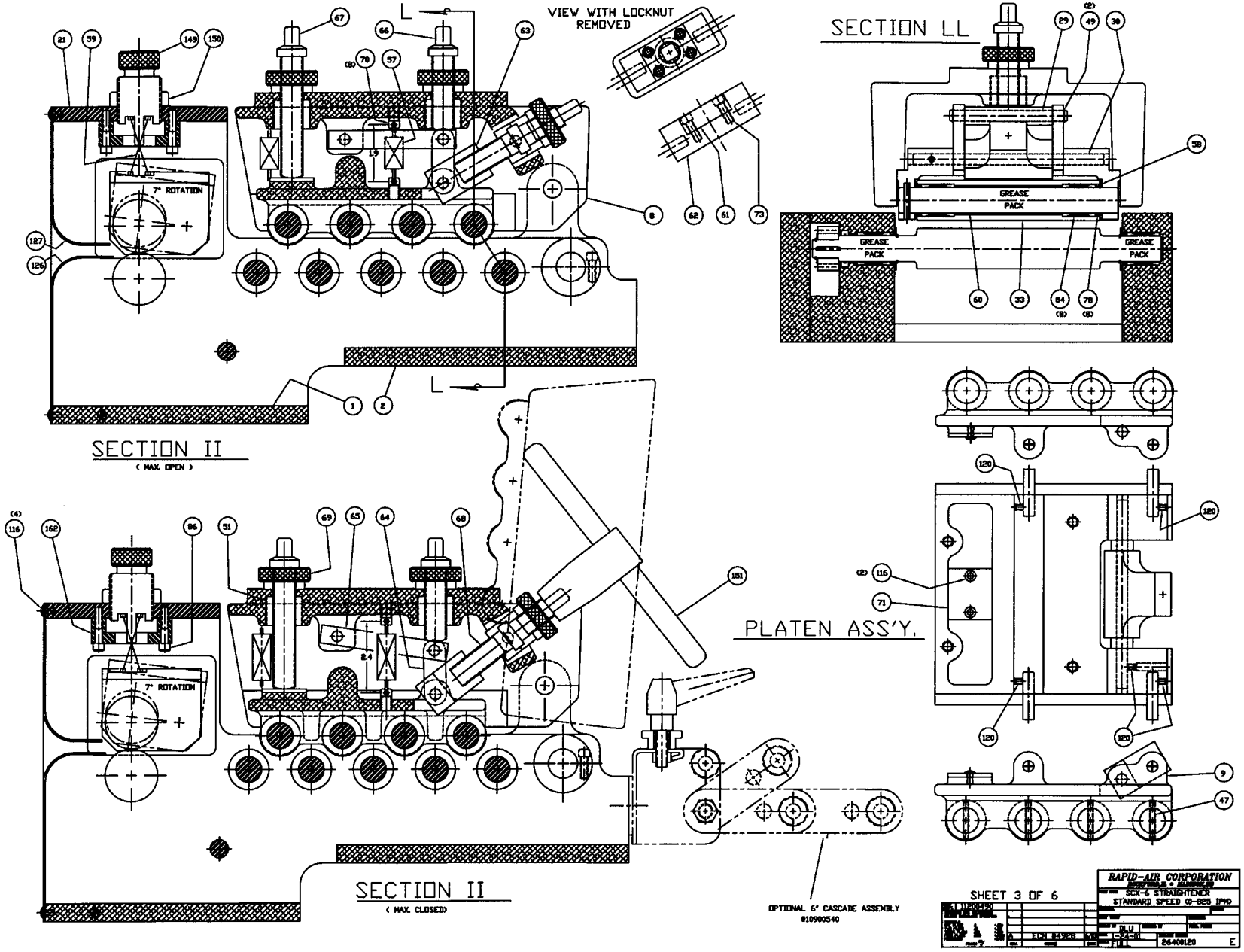

SCX-6 Straightener Standard Speed

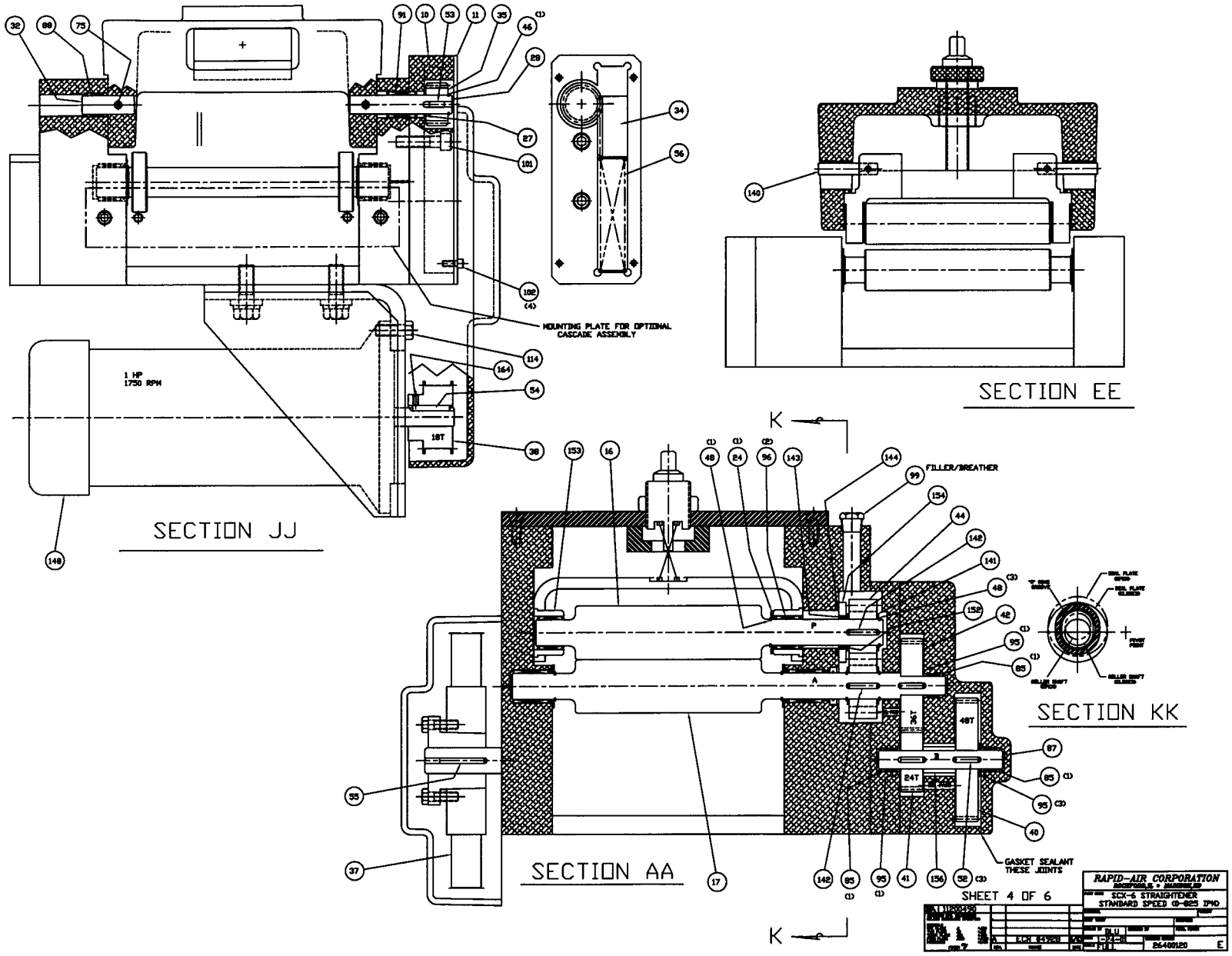

SCX-6 Straightener Standard Speed

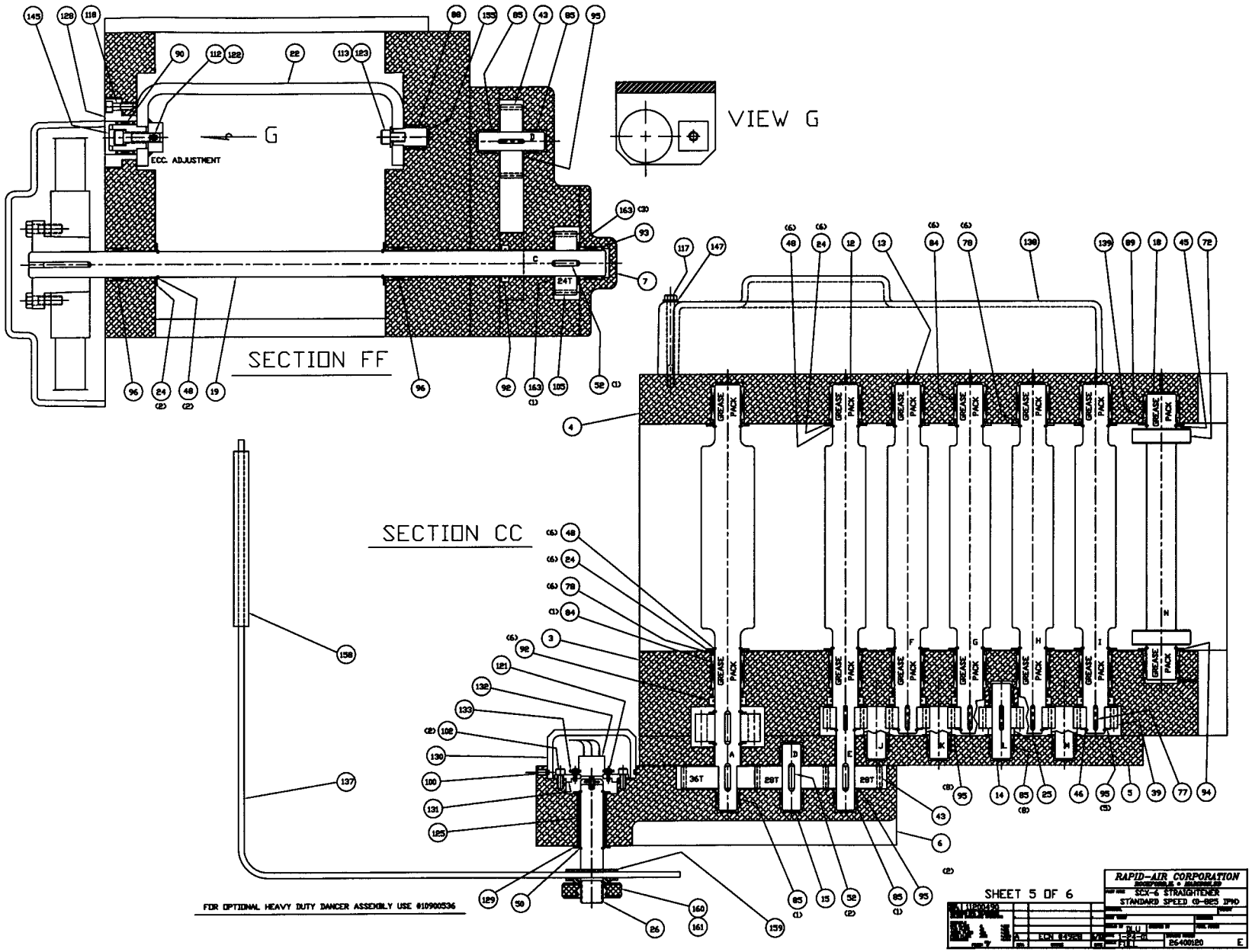

SCX-6 Straightener Standard Speed

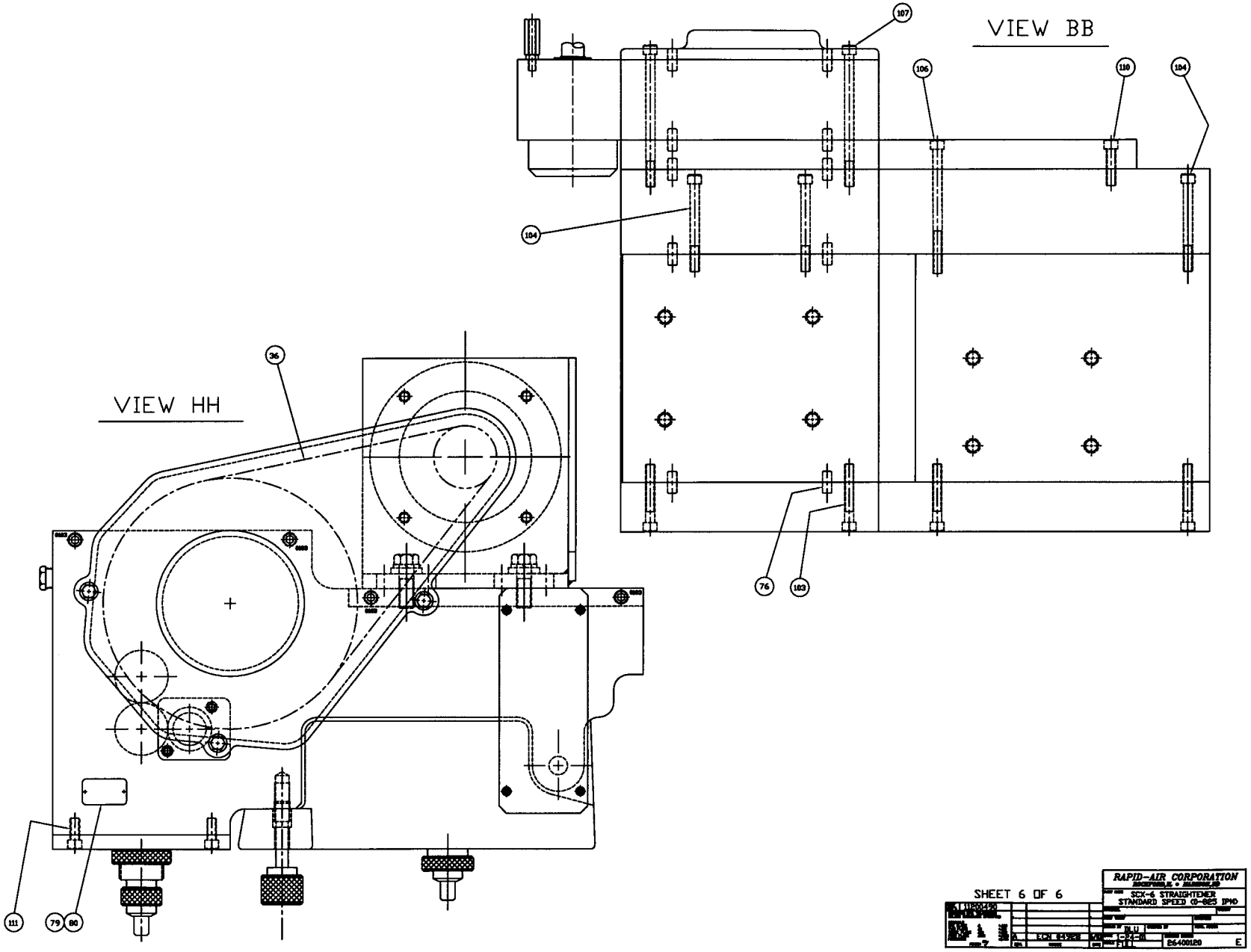

Typical Stamping Layout

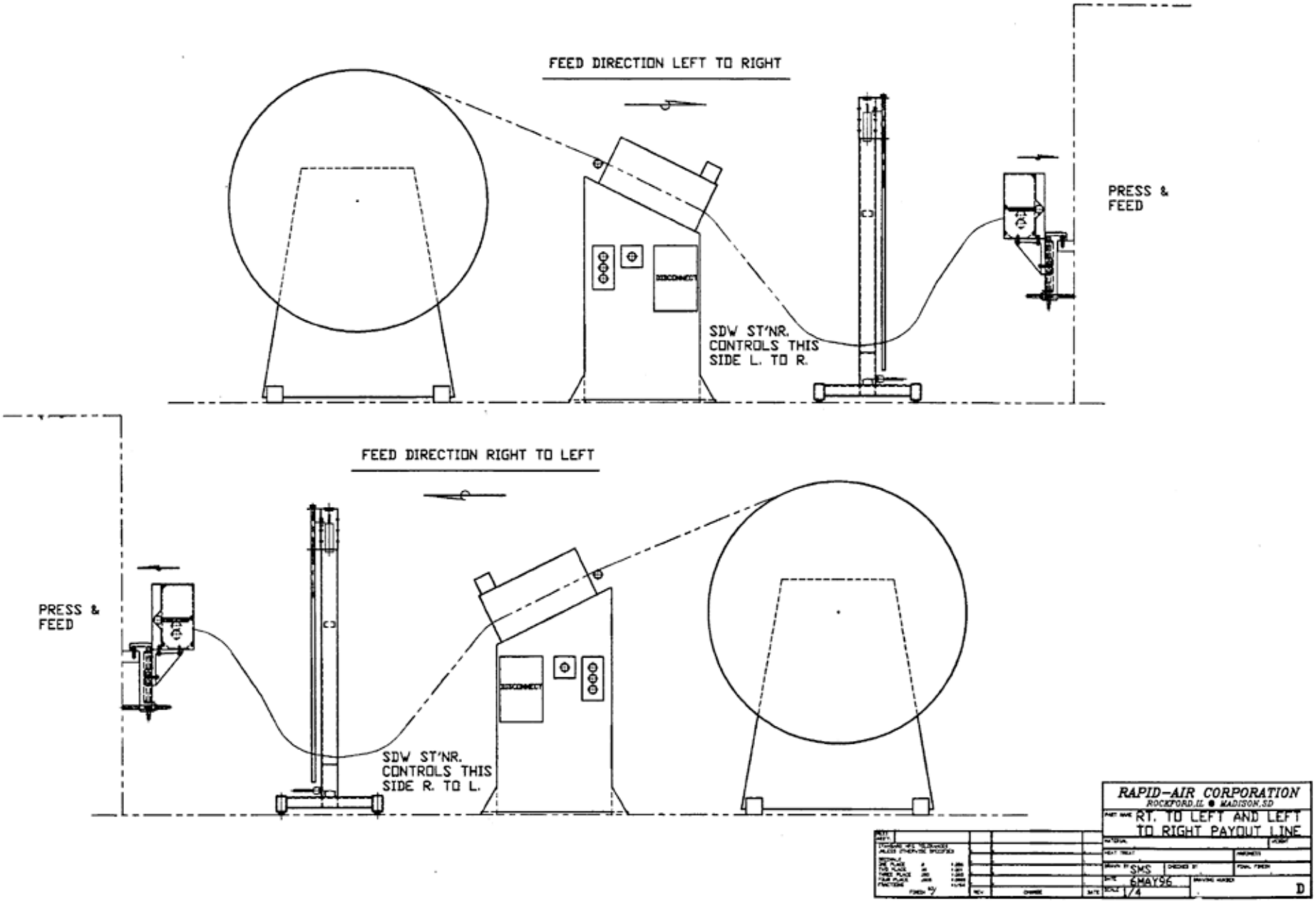

STRAIGHTENER SA3 - SB4

OPERATION
For set up only, place a short length of stock about four feet on the bottom rolls, between the pinch rolls. Set the entrance guide rolls before lowering the cover. Make sure the top rolls are retracted to prevent stock deformation. Apply light pinch roll force on the stock to insure adequate assisting pulling force on the stock and to prevent slippage of the stock over the straightener rolls. Never overload the pinch rolls. This could damage the stock by extrusion causing permanent deformation.

With the cover down and the stock in place, position the idler rolls such that they are mid-way between the drive rolls. The windows in the side of the cover are visual indicators of the idler rolls relative position to the drive rolls.

Do not lock the cover down at this time. With the cover held down firmly by hand, lower the vertical entrance knob until the first idler roll contacts the stock with only slight deformation (crease) at the station. Observe the degree of deformation at this first station by lifting the cover and noting the pattern of light reflecting off the stock surface. Rotate the vertical entrance knob 1/4 turn down and lock in place.

Close the cover, hand hold in place while lowering the exit knob. Continuously observe the changing deformation pattern until all but the last station reflects a change. The stock should reflect a diminishing deformation pattern until the final set of exit rolls afford no deformation. Lock the exit knob. Close the cover and latch.

The dancer arm position for height and range is operator selectable through the settings of thumbwheels. The speed of the straightener rollers is automatically controlled by the position of the dancer arm. As the dancer arm is raised, the straightener rollers increase in speed. This minimizes starting and stopping and resultant stock deformation.

CAUTION: Lateral adjustment, generally, requires no more than two or three turns either side of center. Never force idler rolls against the powered rolls. This will deform the stock.

CAPACITY
The model SA3 is designed for 3" maximum width and .005 to .020 thick material. The SB4 is designed for 4" maximum width and .007 to .035 thick material. The maximum feed rate for SA3 and SB4 is 700 inches per minute. The maximum feed rate for SAM3 and SBM4 is 1400 inches per minute.

ELECTRIC MOTOR
SA3 and SB4 straighteners are furnished with a 1/4 HP - 2500 RPM permanent magnet motor. Input power is single phase, 115 volt A.C. rotation must be CW as viewed from shaft end. SAM3 and SBM4 have a 1/2 HP motor.

STRAIGHTENER SA3 - SB4

Lubrication

Gear transmission oil - Use Mobil 2000 SSU 100 degree F 600W cylinder oil or equivalent.
SA3 & SB4 Worm Gear Case (above motor) 4 oz. capacity.
SA3 Spur Gear Case (straightener side) 4 oz. capacity.
SB4 Spur Gear Case (straightener side) 6 oz. capacity.
Change oil every 1000 hours.

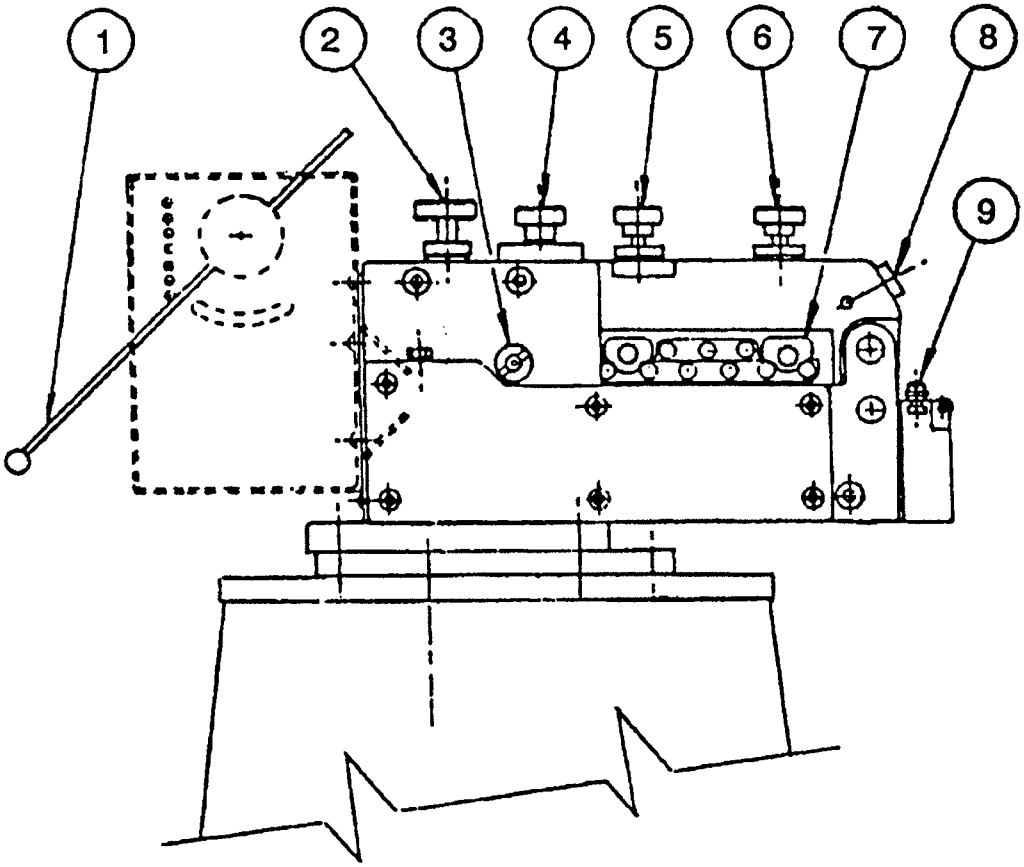

1. Loop Control Arm
2. Pinch Roll Knob
3. Eccentric Trunion
4. Cover Latch
5. Exit Adjustment Knob
6. Entrance Adjustment Knob
7. Visual Indicator Window
8. Lateral Adjustment Knob
9. Entrance Guide Rolls

RAPID ROLL

OPERATION
For set up only, place a short length of stock about four feet long on the bottom rolls, between the pinch rolls. Set the entrance guide rolls to maintain stock position. Make sure the top rolls are retracted. To prevent stock deformation apply light pinch roll force on the stock to insure adequate assisting pulling force on the stock and to prevent slippage of the stock while operating. Never overload the pinch rolls. This could damage the stock by extrusion causing permanent deformation.

The dancer arm position for height and range is operator selectable through the setting of thumbwheels. The speed of the Rapid Roll rollers is automatically controlled by the position of the dancer arm.

As the dancer arm is raised the Rapid Roll rollers increase in speed. This minimizes starting and stopping and resultant stock deformation.

CAPACITY
The model P1V is designed for 1.5" maximum width and .0005 to .075 thick material. The P4V is designed for 4" maximum width and .0005 - .060 thick material. The P8V is designed for 8" maximum width and .0005 - .050 thick material. The maximum feed rate for P1V, P4V & P8V is 700 inches per minute. The maximum feed rate for P1M-P8M is 1400 inches per minute.

ELECTRIC MOTOR
P1V, P4V, and P8V Rapid Rolls are furnished with a 1/4 HP - 2500 RPM permanent magnet motor. Input power is single phase, 115 volt A.C. Rotation must be clockwise as viewed from shaft end. The P1M, P4M & P8M have a 1/2 HP motor.

LUBRICATION
Gear transmission oil – Use Mobil 2000 SSU, 100 degree F 600 W cylinder oil or equivalent. Rapid Roll worm gear case (above motor) 4 oz. capacity (fill to level plug). Change every 1000 hours of operation.

GREASE FITTINGS
Use Mobilux number 2 or equivalent.

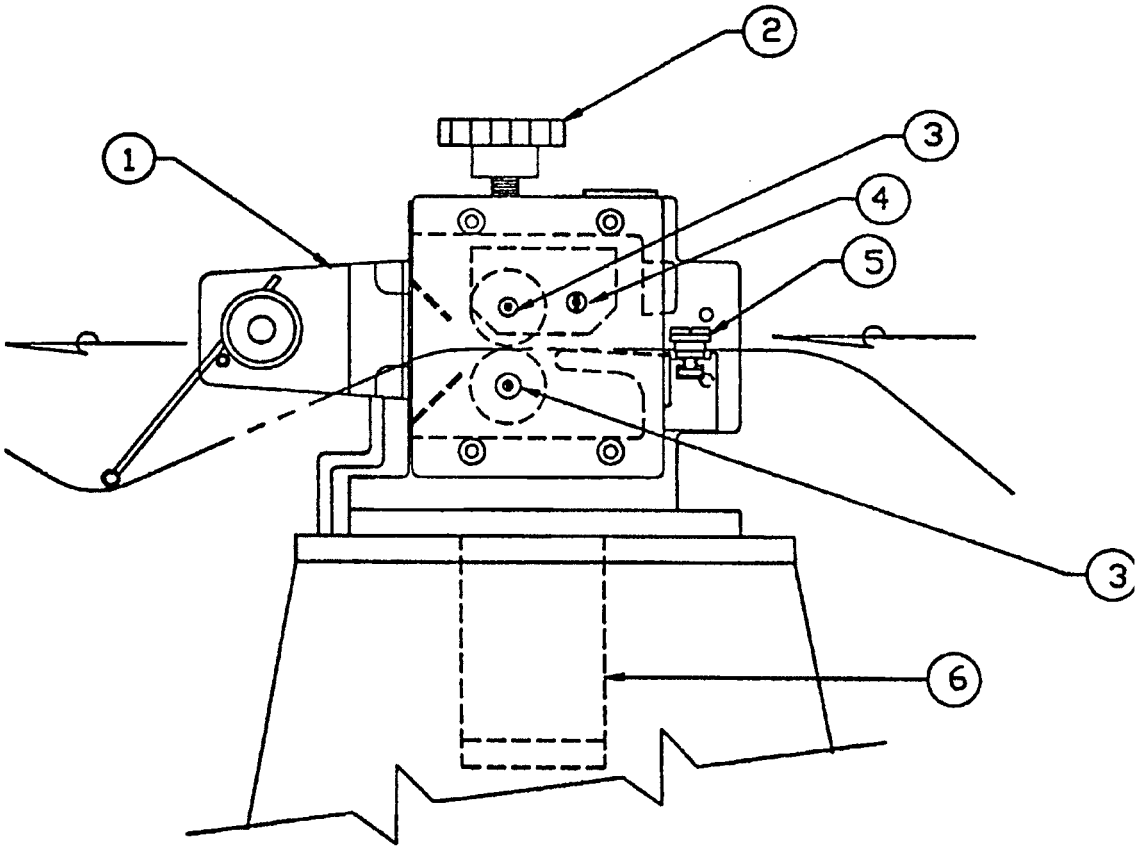

1. Loop Control Arm
2. Pinch Roll Knob
3. Grease Zircs
4. Eccentric Trunion
5. Entrance Guide Rollers
6. D.C. Drive Motor