SERVO FEED OPERATING INSTRUCTIONS

MODELS

S, X, HT SERIES

(INCLUDES 100T & TX, 106T & TX THROUGH 118T & TX, 200T & TX. 220VAC, 3PH, 60HZ)

RAPID-AIR CORPORATION
4601 KISHWAUKEE ST. • ROCKFORD, IL 61109-2925
Phone: (815) 397-2578 • Fax: (815) 398-3887 • Web Site: www.rapidair.com

RAPID-AIR START UP SECTION (100-200-300 S SERIES)

Congratulations on purchasing a Rapid-Air Servo. Not only did you receive a complete servo unit but also telephone support by one of our engineering staff to guide you on using the new servo to it's maximum capability.

In order to maximize your learning time and trouble shoot any interface problems. We would like to request that the following items be complete before calling us.

1. Servo unit should be completely installed and aligned to a die on the press.

2. 220 Vac electrical wiring should be in place and unit turned on.

3. All interface switches should be wired and tested.

4. Air if needed should be connected and ready to be used.

5. All servo interface questions should be directed to your distributor first then to Rapid-Air. Please call 815-397-2578 and ask to have these questions directed to the proper personnel.

TABLE OF CONTENTS

CHARTS AND DRAWINGS DIRECTORY	pg. 3
INTRODUCTION	pg. 4
INSTALLATION AND MECHANICAL SETUP	pg. 5
INSTALLATION OF MOUNTING BRACKET	pg. 6
MECHANICAL ROLL RELEASE SETUP	pg. 7
ELECTRICAL CABLES AND AIR LINE	pg. 8
INTERFACING FEED WITH PRESS	pg. 9
PRETEST WRITE UP	pg. 10
LOADING MATERIAL	pg. 11
SERVO INTERFACING EXPLANATION	pg. 12-13
RESET JOB PARAMETERS	pg. 14
PROGRAM NUMBER DISPLAY	pg. 14
PROGRAMMING PROCEDURE	pg. 17
DRIVE ROLL PARALLELISM ADJ.	pg. 24
TROUBLESHOOTING	pg. 25-26
FAULT DISPLAY - FAULT CODE	pg. 27-28
OPERATIONAL MAINTENANCE PROCEDURES	pg. 29
PRECAUTIONS AND SAFETY	pg. 31
WARRANTY	pg. 32
100 SERIES WIRING DIAGRAM	pg. 33
100 SERIES ENVELOPE DRAWING	pg. 34
200 SERIES ENVELOPE DRAWING	pg. 35
100 SERIES – EXPLODED VIEW AND PARTS LIST FOR SERVO FEED	pg. 36-37
100 SERIES – EXPLODED VIEW AND PARTS LIST FOR CABINET	pg. 38
100 SERIES – EXPLODED VIEW AND PARTS LIST FOR CASCADE ASSEMBLY	pg. 39
200 SERIES – EXPLODED VIEW AND PARTS LIST FOR SERVO FEED	pg. 40-41
200 SERIES – EXPLODED VIEW AND PARTS LIST FOR CONTROL CABINET	pg. 42
200 SERIES – EXPLODED VIEW AND PARTS LIST FOR CASCADE ASSEMBLY	pg. 43

CHARTS AND DRAWINGS

PLAN 100 SERIES

PLAN 200 SERIES

PLAN 300 SERIES

SERVO BRACKET SIDE 100 SERIES
200/300 SERIES - 4&8”

ELECTRICAL PANEL LAYOUT

OPERATORS TERMINAL LAYOUT

PROGRAMMING MAP

JOB INPUT SEQUENCE

MANUAL SEQUENCE

AUTOMATIC SEQUENCE

STROKES PER MINUTE VS. FEED WINDOW

PRESS-FEED AND PILOT SWITCH SETTINGS

INTERFACE SCHEMATICS - 752

SERVO PARTS BREAKDOWN

WIRING SCHEMATIC

100T & TX ENVELOPE DRAWING

200T & TX ENVELOPE DRAWING

INTRODUCTION

The Rapid-Air servo feed carries with it the quality and reliability you have grown to expect from a Rapid-Air product. The motion control system is a programmable industrial computer and this advanced technology combined with a highly engineered precision roll feed, is an unchallanged combination in the press industry.

The compact mechanical package, direct coupled with a brushless servo drive motor, offers response and feed speed accuracy unparalleled in any other powered roll feed. Operator interface is so simplified, a typical setup person can have the servo feed programmed and running in a matter of minutes. A step by step prompt on the four line 80 character display asks simple questions of the operator. Entry of feed length, strokes per minute, % maximum speed and pilot are all that is required for a new setup. Routine jobs can be stored, recalled, changed and saved or run with a simple 2 digit job number entry. Up to 99 jobs may be stored and recalled at will.

Operator programmed feed length, up to 999.999 inches and % max speed selection along with full jog features, allow the operator to thread the material and inch it into position. The inch feature enables the operator to jog the servo feed forward or reverse at a slow rate. The operator can select jog to length or jog continuous to aid in threading up material.

The precision mechanical roll feed unit has been designed for compactness, ease of setup and installation. A 230 volt, 3 phase supply and an air line are all that is required of the customer. Two cables with twist lock plugs and one or two cables for the air valve control are supplied with the control and need only be connected to the proper locations. The electrical controls are housed in a small cabinet which should be mounted close to the press working area. The operator keypad and display are mounted on top of the control area

INSTALLATION AND MECHANICAL SETUP OF SERVO FEED

The shipping container should contain:
1 Mechanical Servo Feed -Standard
1 Console Complete -Standard
1 Cascade Assembly -Optional (100 Series) (Standard 200-300 Series)
1 Servo Mounting Bracket -Optional
1 Guide Support Assy. -Optional

If a mounting bracket was purchased then it should be installed at this time. There are mounting bracket prints in the back of the manual for hole location dimensions and a bracket mounting instruction section can be found later in this section.

If a mounting bracket was not purchased then the feed should be positioned with the centerline of the drive roller in line with the centerline of the die entrance and at the proper pass line height to the die. Aligning the feed to the die (Parallelism) is very important to the accuracy of the feed. Drag due to misalignment can cause short feeds and servo faults.

If the feed is positioned as such that the material has to move unsupported from the exit side of the feed to the die and the material being moved is allowed to droop or buckle during a move, a short feed can occur. A guide should then be built between the feed and the die to solve this problem.
The following chart lists the servo size with the proper bolt size.

SERVO	BOLT	QUANTITY
Series 100 All	3/8-16	4
Series 200 4&8” Wide	3/8-16	4
12” Wide	1/2-13	4
Series 300 All	1/2-13	4

The servo mounting bolts should not penetrate into the servo body by more than .625".

INSTALLATION AND MECHANICAL SETUP OF MOUNTING BRACKET

The cast mounting bracket is available for mounting the servo feed directly to the bolster plate of the press. There are several sets of mounting holes in the bracket to afford the setup person an efficient means of mounting the bracket. Mounting holes are located on the top and front for securing the bracket firmly. It is very important that the servo bracket and the servo feed be secured and not allowed to float or vibrate.

Note: It is very important that the end of the bolster plate where the servo feed is to be mounted, be perpendicular to the top surface of the bolster plate within +-.005 to assure the servo feed will be aligned for proper feeding.

Align the servo feed bracket with the center line of the bolster plate and transfer the mounting holes on the top face. There are two 1/2” holes on the smaller bracket and 3 1/2” holes on the large bracket.

Once the bracket has been aligned and secured to the bolster plate, the servo feed can now be put in place. The slotted holes in the mounting bracket allow for accurate alignment of the servo feed in the x-y axis. There is an elevating screw to position the servo feed to the proper tooling pass line height.

When the servo feed has been aligned and mounted to the bracket, loosen the elevator locking screws and position the servo to match the tooling pass line height. This is accomplished by turning the adjusting screw provided. When the servo is correctly positioned, tighten the elevator locking screws to prevent the unit from moving. There are 2 locking screws on the small bracket and 3 locking screws on the large bracket.

The unit is now assembled and the next step will be to attach the electrical and air to the servo feed unit.

Material alignment is critical. The servo feed rolls are so precise that they will move the material in whatever direction that they are presented to the die. The feed and die must be in line and square to one another. The servo feed does not have the power of a press driven roll feed so the feed will fault out if misaligned. This is a good warning and if corrected could result in better tool life.

MECHANICAL ROLL RELEASE SETUP

All Rapid-Air feeds are set up to add a mechanical pilot release. If the mechanical pilot release is used, and we recommend this for press speeds faster than 250 SPM, then a bracket must be fabricated and attached to the press ram to actuate the pilot release mechanism.

(Note: The roll release height adjustment screw should be backed off all the way to prevent jamming when using the mechanical release.

The bracket should be made adjustable for tuning to the press position in which the roll release should occur. Some attention should be given to the bracket stroke length so that the release mechanism is not jammed into the feed during the press stroke.

The 100 series pilot release actuator has a 1" stroke to full open with an additional .750" overtravel before bottoming out.

The series 200 and series 300 pilot release actuator has a 2" stroke to full open with an additional .750" overtravel before bottoming out.

We do not offer any manufactured bracket to assist you because there are as many combinations for stroke and clearance as there are presses manufactured today.

We do, however, ask that the bracket be designed to withstand considerable resistance as the mechanism has to defeat or overcome the incoming air pressure or roller pressure spring force depending on which servo unit you purchased.

ELECTRIC PILOT RELEASE

If an electric pilot release is used and the servo is a series 200 or series 300 then a switch from the press has to be wired into the control box to control when the release has to take place. If a series 100 was purchased then an optional pneumatic pilot release has to be purchased.

OPTIONAL PILOT RELEASE #10900449 (100 series)

The optional pilot release package consists of a valve, fitting, relay and solenoid cable. A switch signal from the press has to be wired to the control panel and an air line has to be connected to the valve from the main shop air. The relay and solenoid cable will have to be mounted and wired in the electric cabinet if it is to be used with the program.

Optional Mechanical Pilot Release - 100 series #10900483
Optional Mechanical Pilot Release - 200 series #10900489
Optional Mechanical Pilot Release - 300 series #10900490

ELECTRICAL CABLES AND AIR LINE

230 VAC INPUT
The required in put voltage to the control is 230 Vac, 3 Ph, 60 Hz. The amperage needed is 6 amps for 752 control and 10 amps for the 753 control. If unsure of the amperage needed, the name plate on the side of the Pacific Scientific drive will give the number of the control or check the disconnect fuses for the correct fuse size.

460 VAC INPUT
If you plant has only 460 Vac power then a step down transformer is needed in order to run the servo feed. If you purchased the transformer from Rapid-Air then all that is needed is to connect and wire the 460 volt line to the transformer. If you did not purchase a transformer from Rapid-Air then a transformer, 3 KVA for the 100S and 200S servos and 6KVA for the 300S servos, 460/230 VAC 3PH, 60HZ step down transformer is needed before proceeding with the electrical portion of the installation.

The electrical control enclosure is shipped completely ready to be connected to the mechanical feed. Connected to the bottom of the enclosure are (2) cables with keyed screw type connectors for connection to the motor and if the series 200 or 300 was purchased, (1 or 2) push on connectors for connection to the air valves for solenoid actuation of the pilot release and or anti-backup valve.

Position the electrical enclosure at a convenient location near the mechanical feed and attach the cables. The motor cables are easily identifiable by the amount of pins in the plugs. The solenoid cables if any can now be attached and checked for proper location when the feed is up and running.

An air line must be connected from the shop air to the air inlet of the servo feed. The air should be at least 80 PSI continuous and should be dry filtered andlightly lubricated for the best operation of the servo feed. The air inlet on the servo feed is a 3/8-18 NPT pipe tap. The minimum air line size requirement is 1/2”ID hose. - (2 CFM)

INTERFACING SERVO FEED WITH A PRESS

The Servo Drive unit is a slave to the press therefore it needs a command from the press to operate in the automatic mode.

The command is in the form of a normally open contact from a limit switch, cam switch or an electronic feed interface device that can be programmed.

The contact should be commanded or activated at 270 degrees of the press stroke or when the tooling is clear of the material and released and turned off at around 350 degrees of the press stroke. The significance of the release position is to insure that the feed switch is released with the press top stopped. Once the program senses a closure of the feed input, it will command a move and will complete the move regardless of the switch position.

The air operated pilot release also has to have a signal input to operate. The pilot signal should be set to turn on when the point of the pilot is entering the hole. This signal then commands the air roll release to raise and release the material, letting the pin pull the material forward into position. The release should be then commanded to turn off at approximately 180 degrees, letting the rollers return to a holding position for the next move.

The roll release stop adjustment screw is located at the entrance of the feed. (See drawing for your servo) The screw is used to limit the travel of the roller during release. Adjustment may be necessary if using air pilot release at a somewhat high speed with the pilot release deactivating and feed switch activating at a close proximity with each other in degrees of press stroke. To adjust, insert material into the feed, lower rolls, adjust screw, using 3/16 hex wrench, to full in. Release rolls and adjust screw so the material is free to be pulled in by the pilot pin. The adjustment is now complete.
(NOTE: This adjustment does limit the manual roll release travel. If this causes a problem back off the adjustment a little.)

The schematic in the back of this manual points out the switch or contact connections for wiring the interface. Locate the feed and pilot signal input and wire per print. The feed input number is (J52)TBI-2) and the pilot input number is (J52)TBI-4).

This completes the initial setup of the servo feed to the press or other device. The servo is now ready to run as intended.

If more complete interfacing is needed, please refer to the section (interfacing) in this manual for an explanation of inputs and ouputs available.

PRETEST FOR SERVO FEED AND PRESS WITHOUT MATERIAL

Now that your servo feed unit has been mounted and the cables have been attached, you can proceed with testing the unit. The first step is to turn on the main disconnect switch on the electrical enclosure. Next, at the operator's console, pull the power on-off button to the on position. The button should illuminate to indicate that there is power to the system.

The Pacific Scientific drive preforms an initial sequence to check it's internal program. At this time the display should show the Rapid-Air screen for 5 seconds before starting the main setup program. If you are comfortable with programming a job then continue, it not, please refer to the "Programming Procedure" located in this manual.

Follow the programming sequence for the operators terminal to input parameters into job storage. Your servo feed has been fully tested before it was shipped to your facility and this procedure is merely a test to insure that all functions are still functional and the cables are properly seated.

Once you have programmed the required parameters, select the manual mode of operation. If the option of air regulated upper feed roll was purchased, check that the main air is at least 80 psi and check that the roll pressure gage is functional by adjusting the pressure up and down, This is accomplished by turning the pressure adjusting knob. If you did not purchase the air regulated roll option then check that you have enough tension on the material to avoid slipping during feeding. Open and close the feed and anti-backup rolls electrically and or manually. Visually inspect that the rolls open and close as you press the appropriate keys on the keypad or when using the manual levers.

Select the "inch" function (F2 on keypad) on the manual mode screen. Visually check that the rolls rotate both forward and reverse with the corresponding key. The speed is preset to creep the rolls at a slow speed for manual positioning of the material.

CAUTION: Do not attempt to place your fingers or any foreign material into the rolls. Injury to the operator or damage to the servo rolls could result.

After you have verified that the rolls and air logic are operational, you can experiment with the single cycle moves. The procedure is outlined in the programming section of this manual.

Now, you can cycle the press and watch the rolls to verify that the signal from the press window switch signal is functional and actuating at the proper time.

After all the checks have been made and you feel comfortable with the programming of the servo controller, place the servo in automatic mode. Now cycle the press in either the inch, single stroke or continous run, the servo feed should react upon the closure of the press window and signal and simulate a feed progression of material.

LOADING MATERIAL INTO THE SERVO FEED

Upon the satisfactory completion of all the tests, you should be ready to load a strip of material into the servo feed.

Step number one is to select the manual mode of operation on the operators console. Then choose “Operate Rolls”. This will allow you to open the feed rolls and anti-backup rolls to accept the material. You could also open the rolls manually by lifting the lever mounted on the side of the servo feed. Position the leading edge of the material with the center of the material near the center of the entry rolls. Adjust the edge guides on the cascade rolls to the proper width setting. Open the feed rolls and or anti-backup rolls. Hand feed the material into the servo unit until it protrudes out of the feed rolls and starts into the guide on the press. Close the anti-backup rolls (if purchased) to capture the material, then close the feed rolls.

Check the roller force pressure to be sure that there is enough pressure to prevent slippage but not too much to induce camber into the material. The pressure setting is the amount of force necessary to move the material into the press at the speed and feed programmed. You may find it necessary to readjust the force as you finalize the setup procedure. The amount of force needed will vary depending on the width and type of material being fed. Make a note of the final setting to aid in the setup of the servo feed the next time the same material is run.

You are now ready to begin testing the complete system under power. To check the progression, cycle the press in the single cycle mode with the servo feed in the automatic mode. If the progression is correct, no further adjustments are necessary. If the progression is either short or long, go to the troubleshooting chart and perform the sequences described there for inaccurate feeding, once the feed progression has been accuratelly set and the repeatability is satisfactory, you are ready for full automatic mode.

SERVO INTERFACING EXPLANATION

A. TAUT STOCK INPUT (J52)TBI-6)

This is a normally open contact from a switch or device that monitors the loop of material prior to the servo feed. When the material reaches a point that it trips the switch, a taut stock has been reached. This input, when received, immediately drops the automatic which stops the feed in progress. The material should be repositioned in the die before restarting the automtaic sequence, as the progression was lost when the taut stock occurred.

This input also could be used as a “No Stock” switch that would monitor whether or not there is material available to feed.

B. ANTI-BACKUP INPUT (J52)TBI-8)

Whether the anti-backup rolls where purchased with the unit or came on the unit standard, they can be activated to raise in the automatic cycle. The anti-backup rolls, by design, keep the material from sliding back during the pilot operation. They can become a hinderance if the material tend to walk to one side or the other during the feed cycle.

The anti-backup switch can be used as a solution. If the material walking problem is being experienced then a switch or a cam switch with a normally open contact can be wired in from the press. Usually this switch is activated when the press is at 180 degrees or when the die is closed to be sure that the material is being held in position. The rolls will raise for the amount of degrees that the switch is activated, letting the material reposition itself in line with the die. It is crucial that this switch is not activated for too long a time as when the die releases the material, the material will slide back which will cause a misfeed. This feature has to be used in conjunction with the main rolls being raised or it will not give the desired results as one of the rolls will be holding the material from moving.

C. ENABLE INPUT (J4-Pin 5 & 6))

The enable input is shipped from the factory, jumpered, so that the Pac-Sci unit is ready to work after the initialization procedure is complete.

If it is desired that the servo controls are not functional until other equipment or safety source is activated then a normally open contact can be interfaced to this input. If at any time during the feed cycle the input changes state then the feed will stop at this position. If feeding stock, the reference will be lost and the stock will have to be manually repositioned to the correct location. The automatic cycle will be dropped and have to be restarted.

D. ENABLE OUPUT (J52)TB2-15)
This output must be tied to a solid state relay to interfact to the ouside world. The solid state relay must have a D.C. coil and should have a rating of 3-30 VDC. The Rapid-Air #69100165 is recommended for this application. This output is high whenever the enabled input is activated.

E. END OF FEED OUTPUT (J52)TB2-13)
This output must be tied to a solid state relay to interface to the outside world. The solid state relay must have a D.C. coil and should have a rating of 3-30 VDC. The Rapid-Air #69100165 is recommended for this application. This output goes high at the end of every feed and stays high for programmed amount of time before going low. To program the time, with the main screen menu displayed, push the period on the keypad - follow the instructions and enter the time in milli-seconds. The time entered will add to the total feed cycle time and if programmed to last longer than the time from the actual end of feed and the actual tripping of the feed switch then the program will not see the feed switch being tripped. You will then get two hits per feed.

F. AUTOMATIC OUTPUT (J52)TB2-11
This output must be tied to a solid state relay to interface to the outside world. The solid state relay must have a D.C. coil and should have a rating of 3-30 VDC. The Rapid-Air #69100165 is recommended for this application. This output goes high whenever automatic is selected on the program panel. Any faults will cause the automatic ouput to go low.

G. STANDARD PROGRAM- DATA INSTRUMENTS INTERFACE (J52)TB1-14)
With the jumper in place, the standard program is active. Remove jumper, recycle power and the Data Instruments program is active. Only the manual mode will work with the keys at this time.

H. KEYPAD AND DISPLAY INTERFACE (RS232 PORT)
The keypad/display is the interface between the operator and the resident program. The Pacific Scientific drive is purchased with a great many capabilities, none of which can be used unless a program is written to utilize these capabilities. Rapid-Air put a great deal of time making a program that is user friendly and yet gets the job done efficiently. We took all the questions and constructive criticism and came up with a program that would cover all the applications, yet be easy to interface and program by a customer.

If an operator reads the programming procedure in this manual and then reads the screen parameters listed as they are displayed and acts on them by inputting data as needed, the servo can be up and running in a very short time.
1. Select a job number.
2. Input or review parameter for that job number.
3. Thread up material in manual mode.
4. If properly interfaced, go into automatic mode.

RESET JOB PARAMETERS

The reset job parameters routing should be used with special caution. We incorporated it as a user function for two reasons.

The first reason is if a problem caused the displayed parameters to be garbled because of a program glitch, then by resetting the job parameters the problem could be cleared.

The second reason is if there were a number of different jobs in memory that were no longer required, then by resetting the job parameters, all the job numbers would be reset to their default values, which includes putting all zeros in the feed length and strokes per minute area of the program.

CAUTION!! CAUTION!! CAUTION!!
Keep a hard copy record of program numbers and data associated with them for reference if needed. If this function is used in a way other than what it was designed for then all previous data is lost and cannot be recovered.

To enter this function, turn off the program by depressing the master stop button. Turn on the program again and push and hold the “clear entry” key, once the program has started the following screen will be displayed.

**DEFAULT VALUE SETUP PRESS F1 TO RESET TO DEFAULT VALUES, PRESS F4 TO IGNORE CHANGES

**Once F1 has been pressed then all data that had been entered will be reset.

PROGRAM NUMBER DISPLAY

Each servo unit that is shipped has a program number assigned to it. If a problem occurs and cannot be solved by reloading the program then you will be asked the program number associated with this servo.

To view the program number, press and hold the “back space” key during the power up sequence. The program number will be displayed for about 30 seconds. Please find and write down the program number in case it is needed in the future.

SERVO

To help you to enter a job from the keypad, let's create an example.

We will use a feed length of three inches and want to run at 100 strokes per minute. We have a pilot pin on the die, so pilots will have to be used. The max feed arc will be 180 degrees.

The main menu is currently displayed. First we select the job number and we will use job #1.

1. Press F1 to select the job number.
2. Enter job number "01" - press the F4 key when finished.
3. The job number screen shows two choices:
   A. F1 = program parameters. This choice is used if a job has already been programmed and you would like to adjust the parameters that were preset for the job.
   B. F2 = feed-advisor-calc. This should be used when entering a new job number. The two main inputs are the feed length and strokes per minute. The third input is to enter a "1" or a "0" for pilots. We will put in a "1" for "yes for pilots". The fourth input is the feed arc. This is preprogrammed as 180 degrees and need not be changed to set up a job unless specific move parameters in relation to press stroke position is required. To move around in this screen, press the "enter" key in the lower right corner of the key pad. Once the feed length and strokes per minute are entered, then the F4 key to exit the screen. The program now calculates the accel/decel and speed for the parameters entered. At this time the "F4 key" review parameter should be used to check to be sure that you entered the correct parameters.
4. Press "F2" to select the manual mode.
   A. Press F1 to select the "inch" or jog mode. This mode will move the material slowly forward or reverse to position the material at it's proper location. F2 being used for forward and F3 for reverse movement. Press F4 to leave the "inch" mode.
   B. Press F2 to select the "single feed" mode. At this time each press on the F1 key will rotate the rolls to move the material three inches, the feed length that was entered, at the same feed rate as the feed would move the material in the automatic mode. Press the F4 key {exit} to leave this screen.
5. Press "F3" to select automatic cycle. In this mode the servo can be run in the batch or continuous mode.
   A. Press F1 to select the batch mode. In the batch mode, the servo will feed each time it is commanded until the batch count reaches "0", then the automatic cycle drops out.
   B. Press F2 to select the continuous mode. In the continuous mode, the servo will feed each time it is commanded until the command stops or the operator presses the "F4" return key.

FEED ARC

To explain how the “feed arc” is related to the servo feed calculation, we must first explain what the feed arc is in relation to a press.

The press has a die that has two halves. The lower half is stationary and the top half is moveable in an up and down motion which is one cycle from the full open to the full closed to the full open again. The component that makes all of this happen is named “crankshaft”. The crankshaft makes a 360 degree revolution for one cycle of the die from open to close to open again. When the die is fully open, the crankshaft would be at “0” degree position. When the die is fully closed the crankshaft is at 180 degrees or one-half of a revolution.

We ask that a switch be set at 270 degrees to activate the feed because at this position, the die is completely clear of the material. This is also a good starting point to explain the “feed arc” portion of the auto calculation in the Rapid Air program.

If the feed input switch was tripped at 270 degrees of the total revolution of the crankshaft and the arc calculation was 180 degrees then the servo feed would complete it’s feed by 90 degrees of the press cycle or 180 degrees past the 270 degree mark.

The feed arc could be set at 90 degrees so the feed cycle would be complete by 360 degrees or when the press was at the top of the stroke.

The feed arc could be set at 270 degrees so the feed cycle would be complete when the press was at 180 degrees. This example would not work if the feed cycle started at 270 degrees as the feed would still be trying to move the material when the die was closed or together. To use a 270 degree feed arc the feed would have to start at 230 degrees or 240 degrees to be finished moving the material before the die was closed or together. This example could not be possible if the die had pilot pins installed in it for precise locating of the stamped part. The cam switch drawing in the back of the manual will help you visualize the above feed arc explanation.

In essence, the larger the feed arc number up to 270 degrees, the lower the acceleration/ deceleration rate. The smaller the feed arc the higher the acceleration/deceleration rate and the fewer strokes per minute for a given feed length.

OPERATOR INPUT TERMINAL - PROGRAMMING PROCEDURE-STANDARD SOFTWARE

The intent of this section is to familiarize the operator with the program flow and what to expect with every keypress. Each screen on the display will be reviewed with special comments to help clarify what is being asked on the screen. The progarm flow is broken down into 5 sections with themain menu being the home postion. Reviewing the flow chart in the back of this manual will help in understanding the sections.
SECTION1 —- F1=JOB ENTRY
SECTION2 —- F2=MANUAL MODE
SECTION3 —- F3=AUTOMATIC
SECTION4 —-F4=REVIEW JOB PARAMETERS
SECTION 5 —-RAMP=ADJUST ACELERATION AND DECELERATION

The first screen to be displayed on the operator terminal will look like this

RAPID-AIR CORPORATION
4601 KISHWAUKEE STREET
ROCKFORD, IL 61109
815-397-2578

After a few seconds, the display will clear and the following display will appear:

MAIN MENU
F1=JOB F2=MANUAL
F3=AUTOMATIC CYCLE
F4=REVIEW PARAMETERS

SELECT F1=JOB #

The first step in programming the servo feed is to select a job number which will be used to store the parameters the operator inputs or recall the parameters which have been previously loaded into the servo controller program. When the operator selects F1 on the keypad, the screen will change to:

JOB SELECTION MENU
ENTER JOB NUMBER=XXX
PRESS F4 KEY AFTER
CORRECT # IS ENTERED

The operator must enter a 2 digit number before proceeding to any other function. If the job number the operator has entered has been previously stored in memory, or entering a new job, the folowing display will appear:

JOB NUMBER= XXX
F1=PROGRAM PARAMETERS
F2=FEED ADVISOR-CACL
F4=DON'T ALTER VALUES

* If entering in a new job then select (F2) “feed advisor” first as RapidAir can preset the Accel/Decel & Max speeds according to the feed length, feed arc and spm entered.

The job number screen displays (3) choices for the operator. In the first choice, F1=Program parameters, the operator can enter or change the pilots, feed length, strokes per minute that the press is running and speed of the material movement. In the second choice, F2=Feed Advisor-Calc, the operator can enter or change the pilots, feed length, strokes per minute that the press is running and feed arc (free travel of the press in which the feed can move material without a problem) this then calculates the optimum speed of the material movement. The third choice, F4=Exit, puts the job number entered in memory for running at this time, If F1 or F2 was selected one of the following displays will appear:

```
MANUAL PROG--JOB #=XX
LGTH=XXX.XXX SPM=XXX
PILOT=X      %SPEED=XXX
ACC/DEC=XXX%   F4=EXIT
Input or change data at
curser. When complete press
F4 to exit.  Fault window
will appear if feed length
is too long for SPM
```

```
 FEED ADVISOR JOB#=XX
LGTH=XXX.XXX SPM=XXX
PILOT=X   FEED ARC=XXX
F4=EXIT FEED ADVISOR
Input or change data at
curser. When complete press
F4 to exit, fault window
will appear if feed length
is too long for SPM.  Feed
arc is press free travel for
feeding material.  Minimum
arc=10, max=300 degrees.
The % of speed is the auto-
matically calculated.
```

Use the manual program parameters to massage the parameters or to check what the actual feed speed & accel/decel percents are.

This is the fault window that is displayed if the feed length and strokes per minute are not within minimum parameters.

```
FEED PARAMETER OUT
OF RANGE.  THE LENGTH
IS TOO LONG FOR FEED
ARC OR SPM   F4=NEXT
```

F4=Next this command returns to the previous screen so that the new parameters can be entered.

Pressing the F4 key at any time returns you to the main menu.

```
MAIN MENU
F1=JOB #  F2=MANUAL
F3=AUTOMATIC CYCLE
F4=REVIEW PARAMETERS
```

SELECT F2=MANUAL

In order to advance material into the die, using the servo feed, the operator has to be in the manual mode. Pressing F2 on the keypad will cause the screen to change to the manual mode screen. “Cycle rolls with keys” - If the keypad has keys with open rolls or close rolls on it then the keys are active at this time and the rolls can be electrically released for inserting the material into the servo feed.

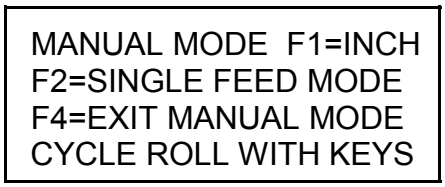

F1=INCH MODE

Pressing the F1 key will allow the operator to change the current “jog to length” to “continuous”. Pressing and holding the F2 and F3 button will command the servo to move the material one programmed feed length. You may press and release the jog button as many times as you wish to get to the feed length. Pressing F1 will display the following screen.

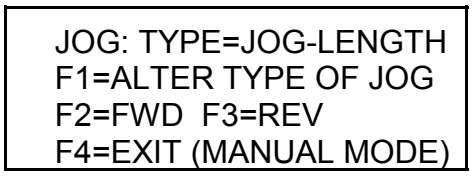

F1=ALTER TYPE OF JOG

Pressing the F1=alter type of jog will allow the operator to change the current “jog to length” to “continuous”. See below. Pressing and holding the F2 and F3 key will command the servo to move the material at a slow rate of speed for as long as the key is pressed.

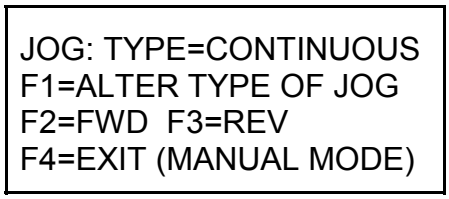

Pressing the F4 key once will reset the program to the manual mode screen.

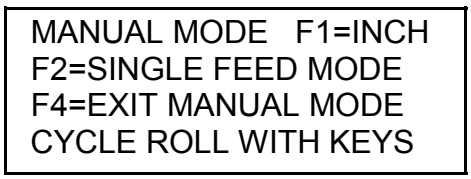

F2-SINGLE FEED

If the operator presses F2 then the following screen is displayed. The single feed mode is active and every time the F1 key is pressed then the feed will cycle and move the distance indicated on the feed length line.

```
SINGLE FEED MODE
FEED LENGTH=XXX.XXX
F1=FEED SINGLE LNGTH
F4=EXIT  (MANUAL MODE)
```

Pressing F4 once resets the program to the manual mode display. Pressing the F4 key twice resets the program to the main menu display. If the F4 key was pressed twice the following screen is displayed.

```
MAIN MENU
F1=JOB #  F2=MANUAL
F3=AUTOMATIC CYCLE
F4=REVIEW PARAMETERS
```

F3=AUTOMATIC CYCLE

If the feed has been properly set up and tested in manual and the press has been electrically interlocked with the feed, feed and pilot switches wired to the correct terminals. Then pressing the F3 key will display the following screen.

```
SELECT CONTINUOUS OR
BATCH CYCLE F1=BATCH
F2=CONTINUOUS CYCLE
F4=EXIT TO MAIN MENU
```

F2=CONTINUOUS

If the F2 key was pressed then the servo will be in the auto total mode and the following screen appears.

```
AUTOMATIC TOTAL=000000
JOB #=XX   PILOTS=NO
LGTH=XXX.XXX  SPM=XXX
SPEED=XXX%   F4=RETURN
```

Pressing the F4 key, stops the automatic cycle and the main menu screen appears.

```
MAIN MENU
F1=JOB #  F2=MANUAL
F3=AUTOMATIC CYCLE
F4=REVIEW PARAMETERS
```

F3=AUTOMATIC CYCLE

If the feed has been properly set up and tested in manual and the press has been electrically interlocked with the feed, feed and pilot switches wired to the correct terminals, then pressing the F3 key will display the following screen.

```
SELECT CONTINUOUS OR
BATCH CYCLE F1=BATCH
F2-CONTINUOUS CYCLE
F4=EXIT TO MAIN MENU
```

F1=BATCH

If the f1 key was pressed then the servo will be in the auto batch mode and the following screen appears.

```
BATCH SETTING=000000
BATCH COUNTER=000000
F1=RESET BATCH COUNT
F4=CONTINUE WITH COUNT
```

If the F1, reset batch count, is pressed then the batch count will be reset to preset or if the F4, continue with count is pressed then either way the following screen appears.

```
AUTOMATIC BATCH=000000
JOB #=XX  PILOTS=NO
LGTH=XXX.XXX  SPM=XXX
SPEED=XXX%  F4=RETURN
```

Pressing the F4 key, stops the automatic cycle and the main menu screen appears. When the automatic screen is displayed, all keys except the F4 key are inactive. Every time the press cycles and trips the feed switch, the feed will cycle once per the parameters displayed on the screen. If the feed encounters excessive material drag while feeding or the material being moved encounters a restriction that stops the material forward movement then a servo fault can occur. If this happens then the following screen is displayed.

```
A DRIVE FAULT HAS OCCURED
NOTE TYPE OF FAULT —
(                    )
```

* Example of fault
#2 Motor over temperature

Look up fault code printout listed in this manual.

If this screen is displayed then the control cabinet has to be opened and the Pac-Sci drive has to be checked. To reset the fault, the master on-off switch has to be cycled which will reset the controller. The material path should be checked for obstruction and parrallelism to the die. If all this seems to be satisfactory and another fault occurs the factory should be consulted.

```
MAIN MENU
F1=JOB #   F2=MANUAL
F3=AUTOMATIC CYCLE
F4=REVIEW PARAMETERS
```

The last section to be covered is the ramp/counters section. To get into this mode, press the ramp pushbutton and the following screen appears.

```
SELECT RAMP/COUNTERS
F1=BATCH/TOTAL COUNT
F2=ACCEL/DECEL RAMPS
F4=EXIT TO MAIN MENU
```

F1=BATCH/TOTAL COUNTS

Pressing the F1 key will bring up the batch/total screen, which is used for presetting the batch count or resetting the total count. The following screen appears.

```
BATCH COUNTER=000000
TOTAL COUNTER=000000
SET:F1=BATCH  F2=TOTAL
F4=RETURN TO RAMP COUNT
```

Pressing the F1-batch counter key allows the operator to preset a batch count. Pressing the F2-total counter key resets the total count to zero. This cannot be undone so be sure that the counter should be reset to zero before pressing F2 key. Pressing the F4 key brings up the following screen.

```
SELECT RAMP/COUNTERS
F1=BATCH/TOTAL COUNT
F2=ACCEL/DECEL RAMPS
F4=EXIT TO MAIN MENU
```

The only section that has not been covered in this write-up is the ramp adjust mode. The ramp adjusts how fast the servo motor gets up to speed and how fast it stops. This feature is an asset that is seldom adjusted but can be a sure cure if material slippage seems to be a problem. With the main menu screen displayed the key labeled ramp is active. Pressing the ramp key produces this display.

```
RAMP PARAMETER MODE
F1=ACCEL%  F2=DECEL%
F3=PERCENT MAX SPEED
F4=RETURN RAMP/COUNT
```

PRESS F1 OR F2

Pressing the F1 or F2 keys will produce one of the following displays. The lower the number entered, the longer the ramp cycle. Press F1 or F2 now.

```
ENTER IN %ACCEL RATE
MAX%=75000 RPM/SEC
MAX ACCEL%=XXX%
F4=EXIT  %ACCEL MENU
```

```
ENTER IN %DECEL RATE
MAX%=75000 RPM/SEC
MAX DECEL% = XXX%
F4=EXIT %DECEL MENU
```

The ramp usually is factory set at .015 on the series 100 drives and .035 on the series 200 & 300 drives. There is some deviation to this when the factory runs the unit, but this is a basic starting point.

DRIVE ROLL PARALLELISM ADJUSTMENT

Every servo feed has an eccentric adjustment screw to adjust the upper roller to be in parallel to the lower roller. The maximum adjustment is .008" on the eccentric.

The adjustment screw is located behind the belt cover and is held fast by a 10-32 socket head cap screw. The acutal adjustment screw is a slotted eccentric pin which is turned clockwise or counter-clockwise to raise or lower one end of the upper roll.

The parallel adjustment is factory set when the unit is manufactured but if material tracking seems to be a problem then this could be a way of solving the problem. To test if the rolls need adjustment, do the following.

1. Remove the front and rear roll covers.
2. Raise the anti-backup rolls. (If any) main rolls should be closed.
3. Shine a light from the rear of the feed toward the main rollers.
4. Inspect from the main rolls side to see if the rollers are parallel. If they are then the material could be the cause of the material walking. If they are not parallel then an adjustmet has to be made.
5. To make the adjustment:

a. Remove manual roll release arm by removing roll pin.
b. Remove belt cover.
c. Locate eccentric screw and loosen 10-32 screw.
d. Turn slotted eccentric screw while viewing rolls until the rolls are parallel.
e. Tighten 10-32 screw and reassemble parts, then retry running material.
For a more accurate adjustment use a feeler gage to check the parallelism.

This completes the eccentric adjustment write-up, if there are further questions, please call the factory.

* Before attempting to solve a possible roll parallelism problem by readjusting the rolls or calling the factory, perform the following test.

Step 1) A 3 to 5 foot length of material should be cut from the storage loop preceeding the servo feed.

Step 2) Lay the material next to a straight line to see if the material is cambered. If it is then this could be the reason that the material is walking. If not, then turn the material upside down from the way it was being fed and insert into the feed. If the material walks in the opposite direction then the material could be to blame.

TROUBLESHOOTING CHART

PROBLEM	CAUSE	REMEDY
No power indication	Disconnect off	Turn disconnect on
	Blown fuse	Check/replace fuse
	Master button in	Pull button out
No display on operators console	Program fault	Check lights on P.C.
	Faulty wiring	Check plug on console
Power on-no motion	Program fault	Check lights on drive
	Drive fault	Check lights on servo drive readout
	Program error	Check parameters
No roll action	No air	Check air line
	Low air pressure	Check air regulator
Material will not enter rolls	Anti-backup closed	Open rolls
	Feed roll adjusting mechanism too close	Open adjustment mechanism
	Material too thick	Check servo parameters
Material will not feed	Low roller force	Raise roller pressure
	Oily material	Clean material
	Program fault	Check parameters
	Obstruction in die	Check die
Material feeds short	Accel to fast	Lower accel speed
	Low roller force	Raise roller pressure
	Oily material	Clean material
	Obstruction in die	Check die
	Feed signal to close to pilot release	Move feed signal input so rolls are closed to feed.
Material feeds long	High % max speed	Lower % max feed speed
	Material slippery	Lower % Decell
	Decell set too high	Lower % Decell
Material camber	High roller force	Lower roller pressure
	Bad stock	Check stock at input for camber

TROUBLESHOOTING CHART (cont.)

PROBLEM	CAUSE	REMEDY
Material feeds off center	Edge guides not set properly	Set edge guides
	Material not centered to feed	Center material
	Bad Material	Try new roll of material
No automatic cycle	No press signal	Check limit switch input to servo control
	Controller fault	Check lights on drive
	Servo fault	Check lights on drive
	Program error	Check parameters on display
Servo squeals while	Servo velocity gain too high	Consult factory
	Belt too loose or tight	Readjust belt tension
Fault signal on Pac-Sci is displayed	Servo fault	Recycle power
	Material jam	Check die
	Power surge/failure	Check/recycle power
Cannot program unit from display	Program fault	Check Pac-Sci & call factory.
	Data Instruments interface jumper loose	Check Data Instruments connection
Mechanical pilot release sticks down	Too much overtravel	Restrict travel of mechanical actuating arm
	Broken spring	Remove plate and check springs
	Needs lube	Remove plate and lubricate release bar

SERVO FAULT DISPLAY

The Pacific Scientific drive has a list of internal faults and displays the number of that fault on it's readout located on the front of the drive. Rapid Air now displays the fault on the keypad display. If a fault occurs the screen will display the number and the name of the fault, but there will not be an explanation accompanying the fault. This is a tool to help you to trouble shoot if the servo fails to perform when commanded.

If a fault was displayed the servo controller will have to be turned off and restarted to clear the fault. If the fault is still present when the Pacific Scientific unit is restarted, the fault may not be displayed on the keypad screen as the fault will not let the internal program restart. The control panel will have to be opened to view the fault again.

A list of probable faults and some explanation is included in this section. If more help is required, then Rapid Air will have to be contacted.

FAULT CODE
(Predefined Variable, Integer, Status Variable, Read-Only)

Guidelines - *0* means the drive is not faulted and not enabled, while *8* means the drive is not faulted and enabled. Alternating *8.>* means actively inhibiting CW motion and alternating *8.<* means actively inhibiting CCW motion

STATUS LED	VALUE	FAULT MEANING
(Blinking) *1*	1	Velocity feedback (VelFB) over speed
(Blinking) *2*	2	Motor Over-Temp
(Blinking) *3*	3	Drive Over-Temp
(Blinking) *4*	4	Drive I*t
(Blinking) *5*	5	1-n Fault (9x3)
(Blinking) *6*	6	Control ±12 V supply under voltage
(Blinking) *7*	7	Output over current or bus over voltage
(Blinking) *9*	9	Not Assigned
(Blinking) *A*	10	Bus OV detected by DSP
(Blinking) *b*	11	Auxiliary +5V Low
(Blinking) *C*	12	Not assigned
(Blinking) *D*	13	Not assigned
(Solid) *E**	14	Processor throughput fault
(Blinking) *E**	14	Power Up Self Test Failure
(Alternating) *E1*	225	Bus UV, Bus Voltage VBUSTHRESH
(Alternating) *E2*	226	Ambient Temp Too Low
(Alternating) *E3*	227	Encoder commutation align failed (Only CommSrc=1)
(Alternating) *E4*	228	Drive software incompatible with NV memory version
(Alternating) *E5**	229	Control Card hardware not compatible with drive software version
(Alternating) *E6*	230	Drive transition from unconfigured to configured while enabled
(Alternating) *E7*	231	Two AInNull events too close together
(Alternating) *F1*	241	Excessive Position Following Error
(Alternating) *F3*	243	Parameter Checksum Error (Memory Error)

*FaultReset cannot reset these faults.
See ExtFault for further information on Blinking E, Blinking 1 and Alternating F3.

MOTOR SERVICE

The servo motor is flanged mounted and secured with four socket head cap screws. The motor removal has to be done in a sequence as described below.

1. The manual roll release handle has to be removed. The inner roll pin holds the handle to the shaft. Once this is removed the handle should slide off the shaft.
2. The belt guard has to be removed. It is fastened with four 1/4-20 socket head cap screws on the 100 & 200 servos and five 5/16-18 socket head capscrews on the 300B.
3. Remove the belt tension then remove the motor.
4. Install new motor and reassemble in reverse order of the previous instructions.
5. When reinstalling the belt, the tension on the belt should be 1/64" deflection per inch distance between the center lines of the pulleys using 1.5 to 2 lbs. force to cause the deflection. The best way is to tension the belt and try running the servo for a few cycles. If you get a high vibration on the belt when the feed stops then you have to readjust the belt tension. It will have to have more or less tension to stop the vibration of the belt.

MANIFOLD ASSEMBLY

The manifold assembly was designed to give the customer easy access to the components. The valve for the electric roll release and if supplied, the anti-backup valve is mounted on the side of the feed. The air regulator and pressure gauge is mounted on the input side of the feed. All can be easily replaced if needed.

ROLLER AND GEAR BOX ASSEMBLY

At this stage of disassembly, all field maintenance components are exposed and easily accessible. No further field service should be necessary on the roller and gear box assembly unless the gear train is suspected of a malfunction. The drive rolls should be checked for erroneous wear pattern while they are exposed and cleaned before reassembly.

MAINTENANCE PROCEDURES

DAILY	WEEKLY	MONTHLY
Wipe off feed rolls	Check wear pattern of rolls	Check oil level
Clean any dirt from servo unit		Check cables for cuts or wear
Clean any dirt from operators pendant		

REASSEMBLY OF UNIT

Prior to assembly, attention must be given to three points of contact that require an application of Moly-Cote, Lubriplate or other suitable heavy grease.
The three points are:

1. The antibackup piston which is located at the feed entrance.
2. The main roll piston and the spiral pins in the main roller tie plate which can be seen by biewing straight down through the center of the feed at approximately half way from the inlet to the exit roller. The piston is positioned horizontally at the base of the feed and approximately in the center of the feed if viewing from the gear box to the belt cover.
3. The mechanical roll release shaft located at the exit side of the feed. Three screws have to be removed and then the keeper plate can be removed. The inner shaft should be thoroughly greased to prevent sticking.

Do not apply excessive grease as it may fall onto the drive rollers and cause misfeeding due to material slippage. All bearings are sealed and need no additional lubrication.

LUBRICATION

The gear box oil must be kept up to sight gauge level and changed after every 2000 hours of use. Recommended oil is Mobil #SHC630 or equivalent. The oil reservoir capacity is 3.5 oz. The oil can be drained by removal of the drain plug located near the base of the gear housing cover, just below the sight gauge. The oil reservoir is filled through the pipe thread port occupied by the air breather plug near the upper edge of the gear housing cover.

NOTE: THE ORIGINAL BREAK-IN OIL IN THE GEAR BOX SHOULD BE CHANGED AFTER 100 HOURS OF CYCLE TIME AND EXAMINED FOR CHIPS OR FOREIGN MATTER. REPLACE THE BEAR BOX OIL PER INSTRUCTIONS.

The anti-backup rollers have been lubricated at the factory and should need no further attention. If they are found to slip in the reverse direction, consult the factory for further assistance.

PINCH ROLL & ANTI-BACK UP ACTUATING PISTONS

Periodically grease with lubriplate or equivalent grease to anti-backup & pinch roll actuating piston nose where it contacts the pressure plate.

NEVER - Put screwdrivers or foreign materials in feed rolls

NEVER - Hold onto material as it is being fed through the servo

NEVER - Wear neckties around the servo feed rolls

NEVER - Force the rolls open by prying on them

NEVER - Modify the mechanical aspects of the servo feed

CAUTION - Contact the factory before drilling any holes in the unit

CAUTION - Wear proper eye protection when working around the servo

CAUTION - Do not wear loose clothing around the servo feed rolls

WARRANTY

ALL SALES BY THE COMPANY ARE MADE SUBJECT TO THE FOLLOWING TERMS AND CONDITIONS. PLEASE READ.

WARRANTY - The Company warrants, for a period of one year from date of shipment by the Company, that the product shipped is free from defects in material and workmanship. THIS WARRANTY IS EXCLUSIVE AND IN LIEU OF ALL IMPLIED WARRANTIES IN LAW, INCLUDING MERCHANT - ABILITY. The Company obligation under this warranty is limited to repairing or replacing, F.O.B. Madison, SD, any part or parts proved to have been defective when shipped. In no event shall the Company be liable for special or consequential damages. Provisions set forth in specifications are descriptive and subject to change and are not intended as warranties.

CUSTOMER LICENSE AGREEMENT

The RAPID-AIR CORPORATION reserves the rights in it's software. The software program is licensed by RAPID-AIR to the original purchaser of the equipment which contains the software for use only on the terms set forth in this license.

You may use the program only on the programmable servo computer furnished with the system and only in conjunction with the servo feed supplied with the system.

You may not without expressed permission from Rapid-Air:

A. Copy, distribute, or document the program for others.
B. Modify or merge any portion of the program for use on non compatible hardware.
C. Make alterations to the program.

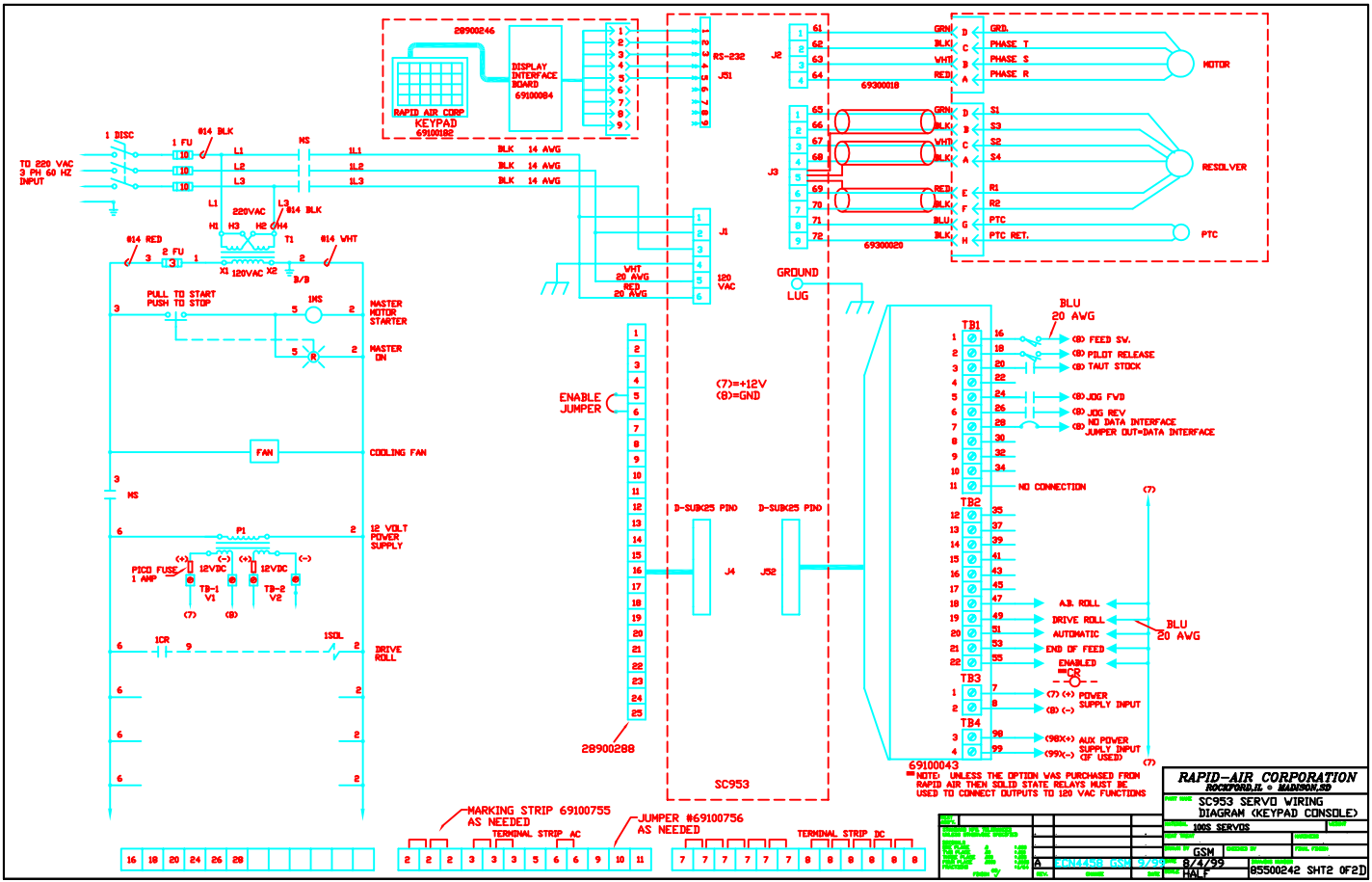
28900246
RAPID AIR CORP
KEYPAD
69100182
DISPLAY
INTERFACE
BOARD
69100084
RS-232
J51
J2
J3
J1
J4
J52
69300018
69300020
MOTOR
RESOLVER
PTC
GRD.
PHASE T
PHASE S
PHASE R
S1
S3
S2
S4
R1
R2
PTC
PTC RET.
GRN
BLK
WHT
RED
BLU
1 DISC
TO 220 VAC
3 PH 60 HZ
INPUT
1 FU
#14 BLK
L1
L2
L3
NS
1L1
1L2
1L3
BLK 14 AWG
220VAC
H1
H3
H2
H4
T1
X1
X2
120VAC
#14 RED
#14 WHT
2 FU
B/B
WHT
20 AWG
RED
20 AWG
120
VAC
GROUND
LUG
PULL TO START
PUSH TO STOP
1MS
MASTER
MOTOR
STARTER
MASTER
CR
COOLING FAN
FAN
12 VOLT
POWER
SUPPLY
P1
PICO FUSE
1 AMP
12VDC
TB-1
V1
TB-2
V2
1CR
1SOL
DRIVE
ROLL
ENABLE
JUMPER
(7)=+12V
(8)=GND
D-SUB25 PIN
28900288
SC953
TB1
TB2
TB3
TB4
BLU
20 AWG
(8) FEED SW.
(8) PILOT RELEASE
(8) TAUT STOCK
(8) JOG FWD
(8) JOG REV
NO DATA INTERFACE
JUMPER OUT=DATA INTERFACE
NO CONNECTION
A.B. ROLL
DRIVE ROLL
AUTOMATIC
END OF FEED
ENABLED
=OR
(7) (+) POWER
SUPPLY INPUT
(8) (-)
(98)(+) AUX POWER
SUPPLY INPUT
(99)(-) OF USED)
69100043
=NOTE: UNLESS THE OPTION WAS PURCHASED FROM
RAPID AIR THEN SOLID STATE RELAYS MUST BE
USED TO CONNECT OUTPUTS TO 120 VAC FUNCTIONS
MARKING STRIP 69100755
AS NEEDED
TERMINAL STRIP AC
JUMPER #69100756
AS NEEDED
TERMINAL STRIP DC
RAPID-AIR CORPORATION
ROCKFORD,IL • MADISON,SD
SC953 SERVO WIRING
DIAGRAM (KEYPAD CONSOLE)
100S SERVOS
GSM
8/4/99
HALF
85500242 SHT2 OF2D

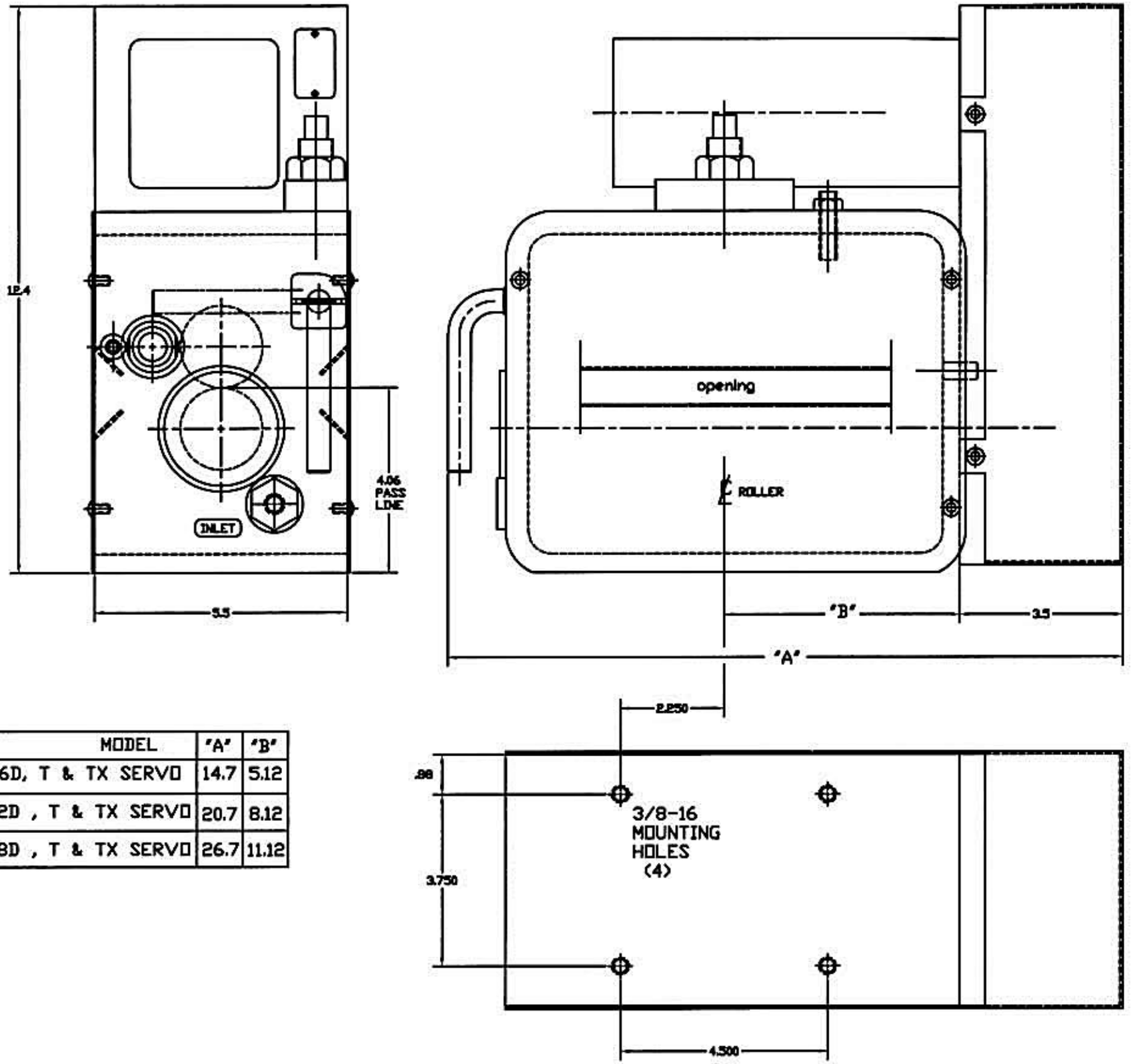

MODEL	"A"	"B"
106D, T & TX SERVO	14.7	5.12
112D , T & TX SERVO	20.7	8.12
118D , T & TX SERVO	26.7	11.12

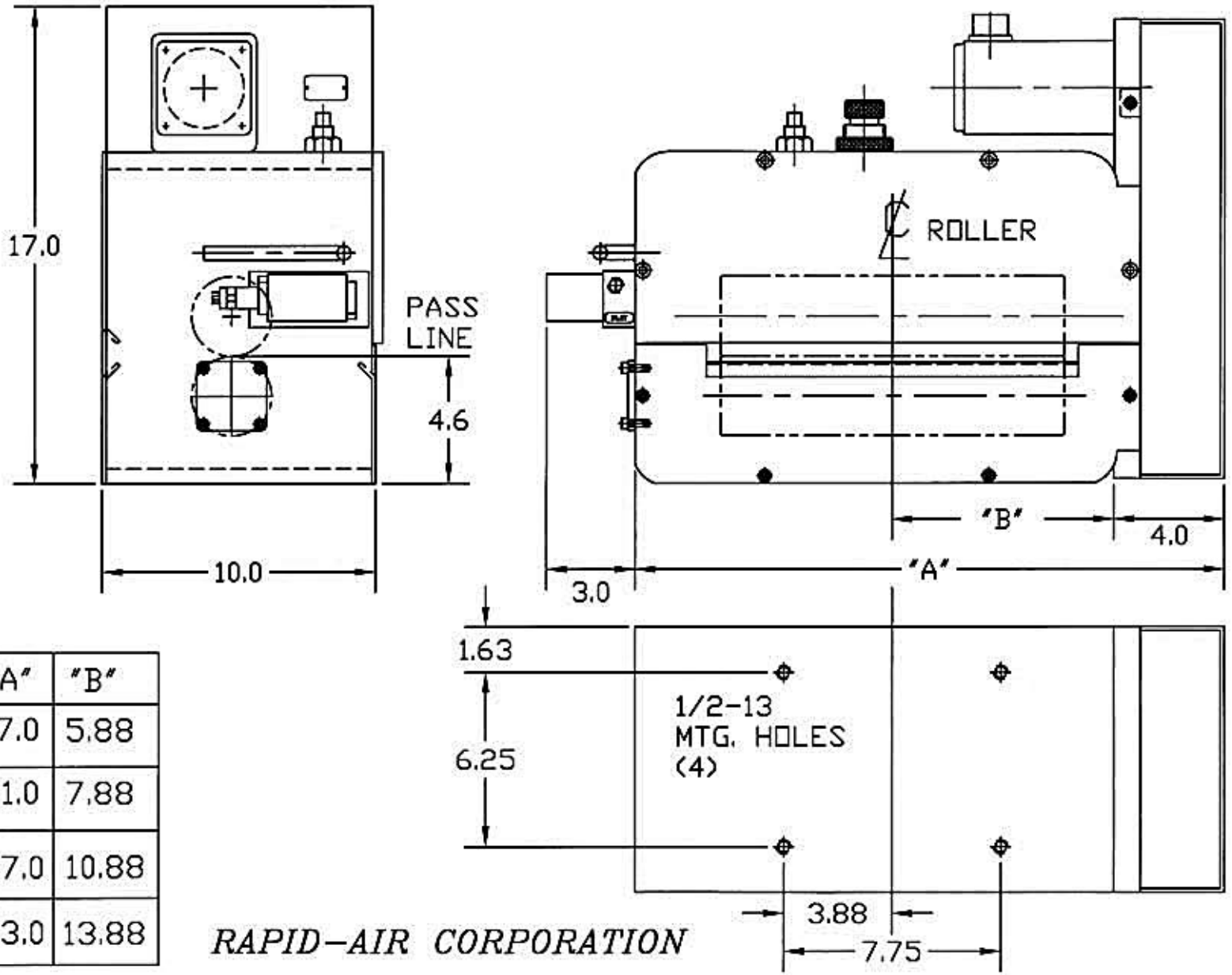

MODEL	"A"	"B"
208T & TX SERVO	17.0	5.88
212T & TX SERVO	21.0	7.88
218T & TX SERVO	27.0	10.88
224T & TX SERVO	33.0	13.88

RAPID–AIR CORPORATION

100 Series Servo Feed Exploded View

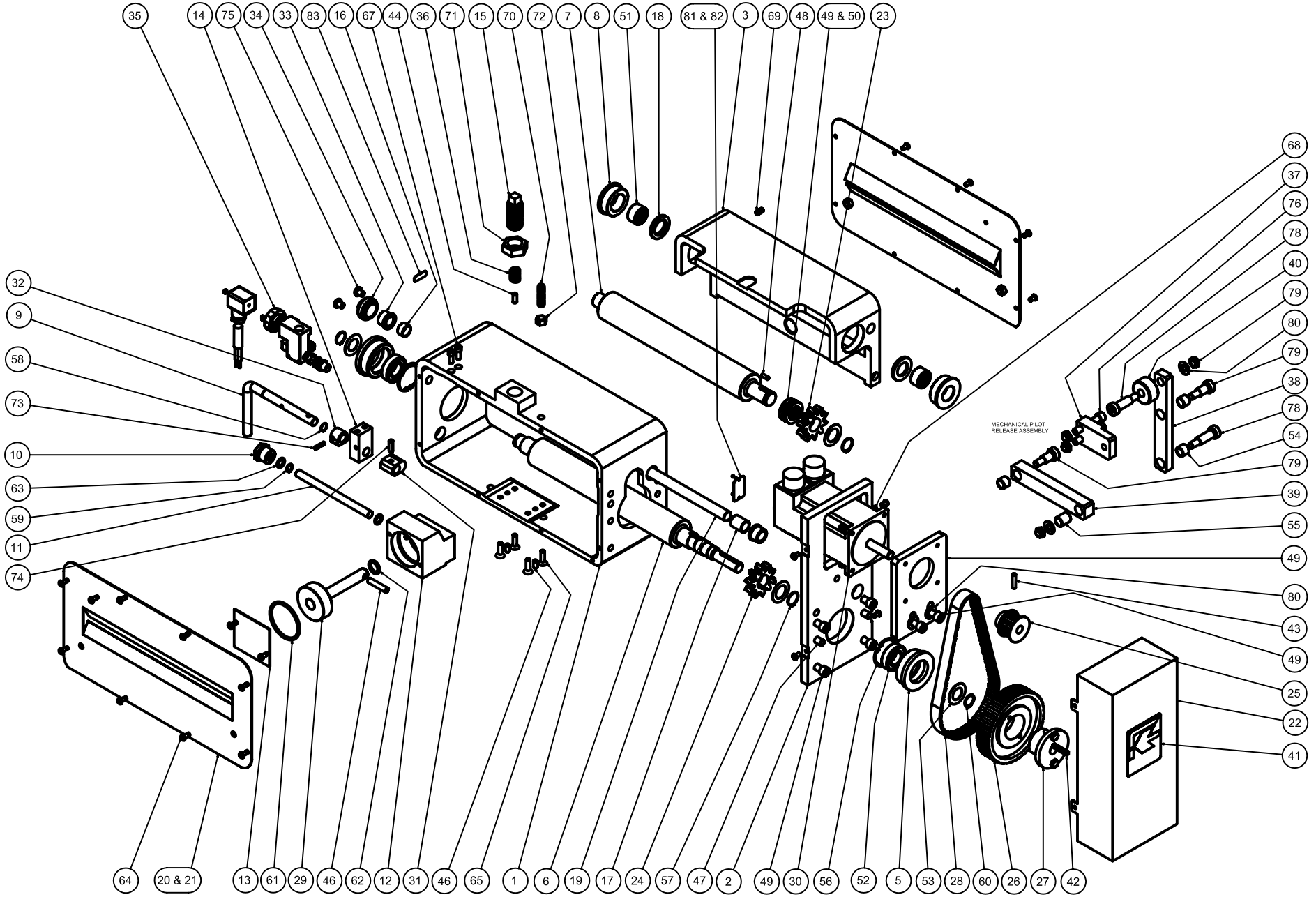

100 Series Servo Feed Parts List

ITEM	QTY.	PART NO. 106D, T ,TX ASS'Y.	PART NO. 112D, T , TX ASS'Y.	PART NO. 118D, T , TX ASS'Y.	DESCRIPTION
83	1	39900175	39900175	39900175	"INLET" LABEL
82	2	66300250	66300250	66300250	DRIVE SCREW
81	2	39900051	39900051	39900051	SERIAL # TAG
80	1	61200026	61200026	61200026	FLAT WASHER 3/8
79	4	65213716	65213716	65213716	THIN ESNA NUT 3/8-16
78	2	66153125	66153125	66153125	SHOULDER SCREW 1/2 DIA. X 1 1/4
77	2	66153075	66153075	66153075	SHOULDER SCREW 1/2 DIA. X 3/4
76	2	65936200	65936200	65936200	SHCS 3/8-16 X 2
75	2	66631037	66631037	66631037	BHSCS 5/16-18 X 3/8
74	1	62425075	62425075	62425075	ROLL PIN 1/4 X 3/4
73	1	62419075	62419075	62419075	ROLL PIN 3/16 X 3/4
72	1	65113716	65113716	65113716	HEX JAM NUT 3/8-16
71	1	65118814	65118814	65118814	HEX JAM NUT 7/8-14
70	1	66700056	66700056	66700056	OVAL POINT SET SCREW
69	1	61444050	61444050	61444050	SET SCREW
68	4	65912075	65912075	65912075	SHCS #10-32 X 3/4
67	2	65920062	65920062	65920062	SHCS 1/4-20 X 5/8
66	6	65936100	65936100	65936100	SHCS 3/8-16 X 1
65	4	66520075	66520075	66520075	FHSCS 1/4-20 X 3/4
64	---	66612037 (13)	66612037 (21)	66612037 (21)	BHSCS #10-32 X 3/8
63	2	60108111	60108111	60108111	"O" RING
62	1	60108208	60108208	60108208	"O" RING
61	1	60108228	60108228	60108228	"O" RING
60	2	60910078	60910078	60910078	RETAINING RING
59	1	60930043	60930043	60930043	GRIP RING
58	1	60910050	60910050	60910050	RETAINING RING
57	2	60910087	60910087	60910087	RETAINING RING
56	2	60900165	60900165	60900165	RETAINING RING
55	1	64100074	64100074	64100074	BRONZE BUSHING
54	3	64100069	64100069	64100069	BRONZE BUSHING
53	2	64520028	64520028	64520028	THRUST WASHER
52	2	64600054	64600054	64600054	BALL BEARING
51	2	64500061	64500061	64500061	NEEDLE BEARING
50	4	34700117	34700117	34700117	THRUST WASHER
49	1	64510001	64510001	64510001	THRUST BEARING
48	2	62318050	62318050	62318050	DOWEL PIN 3/16 X 1/2
47	2	62337075	62337075	62337075	DOWEL PIN 3/8 X 3/4
46	1	62131150	62131150	62131150	SPIROL PIN
45	2	62325050	62325050	62325050	DOWEL PIN 1/4 X 1/2
44	1	62325062	62325062	62325062	DOWEL PIN 1/4 X 5/8
43	1	62500001	62500001	62500001	TAPER PIN
42	1	36800013	36800013	36800013	KEY
41	1	39900245	39900245	39900245	RAPID-AIR LOGO
40	1	34200265	34200265	34200265	MECHANICAL PILOT ROLLER
39	1	31702089	31702089	31702089	HORIZONTAL LINK PLATE
38	1	31702090	31702090	31702090	VERTICAL LINK PLATE
37	1	31702091	31702091	31702091	LINK SUPPORT PLATE
36	1	37500107	37500107	37500107	SPRING
35	1	10900449	10900449	10900449	PILOT RELEASE KIT
34	1	32900854	32900854	32900854	ECCENTRIC SHAFT
33	2	64100073	64100073	64100073	BUSHING
32	1	36500044	36500044	36500044	CAM
31	1	36500043	36500043	36500043	CAM
30	1	69000024 D,T 69000025 TX	69000024 D,T 69000025 TX	69000024 D,T 69000025 TX	MOTOR
29	1	25500071	25500071	25500071	PISTON ASSEMBLY
28	1	32500003	32500003	32500003	TIMING BELT
27	1	32500030	32500030	32500030	BUSHING (FOR 32500029)
26	1	32500029	32500029	32500029	ALUMINUM PULLEY
25	1	32500001	32500001	32500001	MOTOR PULLEY
24	1	32602600	32602600	32602600	LOWER ROLLER GEAR
23	1	32600231	32600231	32600231	UPPER ROLLER GEAR
22	1	31500426	31500426	31500426	BELT COVER HOUSING
21	1	31400543	31400545	31400547	GUARD (EXIT SIDE , MECHANICAL PILOT UNITS)
20	2	21900251	21900252	21900253	GUARD ASSEMBLY (STANDARD UNITS)
19	1	32900852	32900855	32900856	PIVOT SHAFT
18	2	34100320	34100320	34100320	UPPER ROLLER SPACER
17	1	34100319	34100319	34100319	SPACER
16	1	34100318	34100318	34100318	SPACER
15	1	36100099	36100099	36100099	ADJUSTING SCREW
14	1	31702088	31702088	31702088	CAM HANDLE SUPPORT PLATE
13	1	31500425	31500425	31500425	PISTON COVER
12	1	30100284	30100284	30100284	PISTON HOUSING
11	1	34400533	34400534	34400535	AIR TUBE
10	1	36300008	36300008	36300008	AIR INLET FITTING
9	1	36600035	36600035	36600035	CAM HANDLE
8	2	33900264	33900264	33900264	BEARING SLEEVE
7	1	34200365	34200367	34200381	UPPER ROLLER
6	1	34200364	34200366	34200380	LOWER ROLLER
5	2	30100283	30100283	30100283	BEARING HOUSING
4	1	31702086	31702086	31702086	MOTOR MOUNTING PLATE
3	1	31900636	31900637	31900638	ROLLER BRACKET
2	1	31702084	31702084	31702084	SIDE PLATE
1	1	20100005	20100006	20100007	ROLLER HOUSING
ITEM	QTY.	PART NO. 106D, T ,TX ASS'Y.	PART NO. 112D, T , TX ASS'Y.	PART NO. 118D, T , TX ASS'Y.	DESCRIPTION

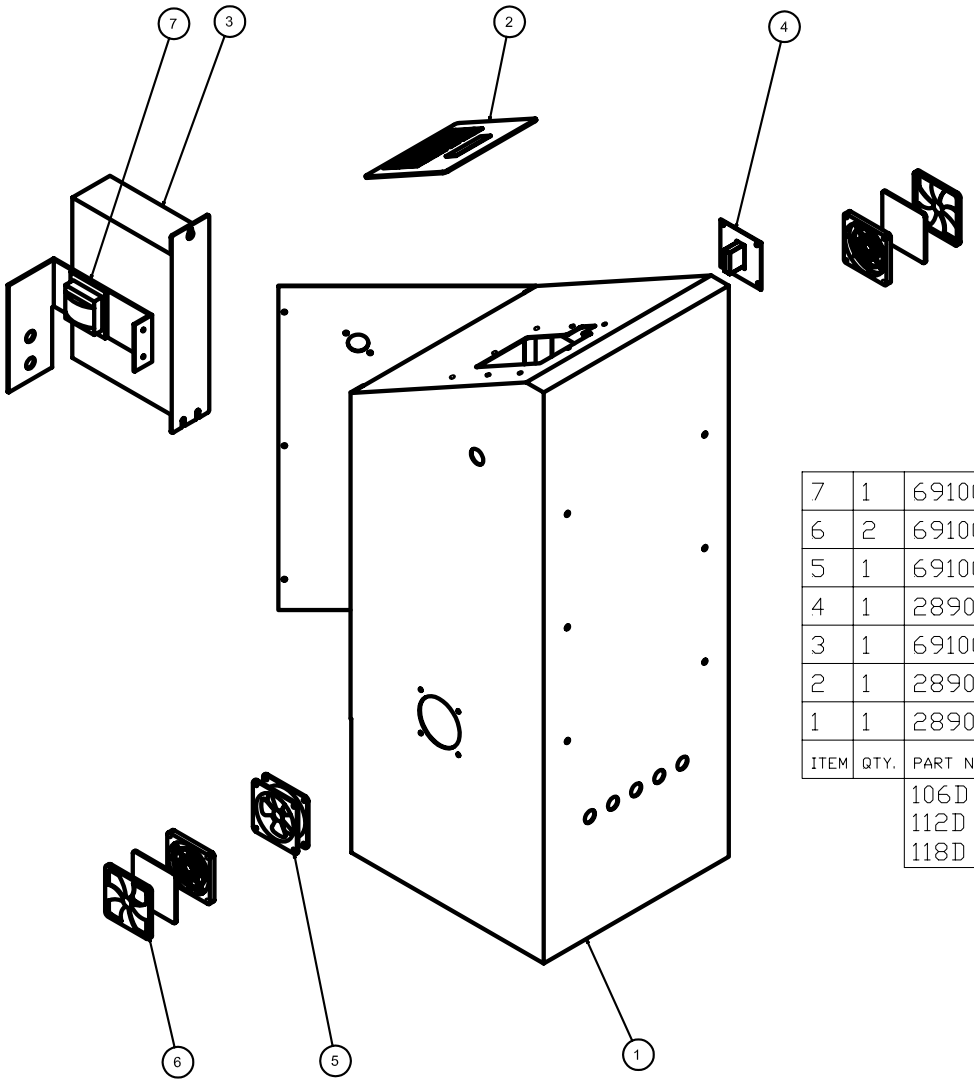

ITEM	QTY.	PART NO.	PART NO.	DESCRIPTION
		106D 112D 118D	106T&TX 112T&TX 118T&TX	
1	1	28900245	28900245	CABINET ASSEMBLY
2	1	28900246	28900246	KEYPAD ASSEMBLY
3	1	69100098	69100098	DRIVE
4	1	28900281	28900238	POWER ON/OFF ASSEMBLY
5	1	69100642	69100642	FAN ASSEMBLY
6	2	69100643	69100643	FAN FILTER ASSEMBLY
7	1	69100031	69100031	POWER SUPPLY

100 Series Cabinet Exploded View and Parts List

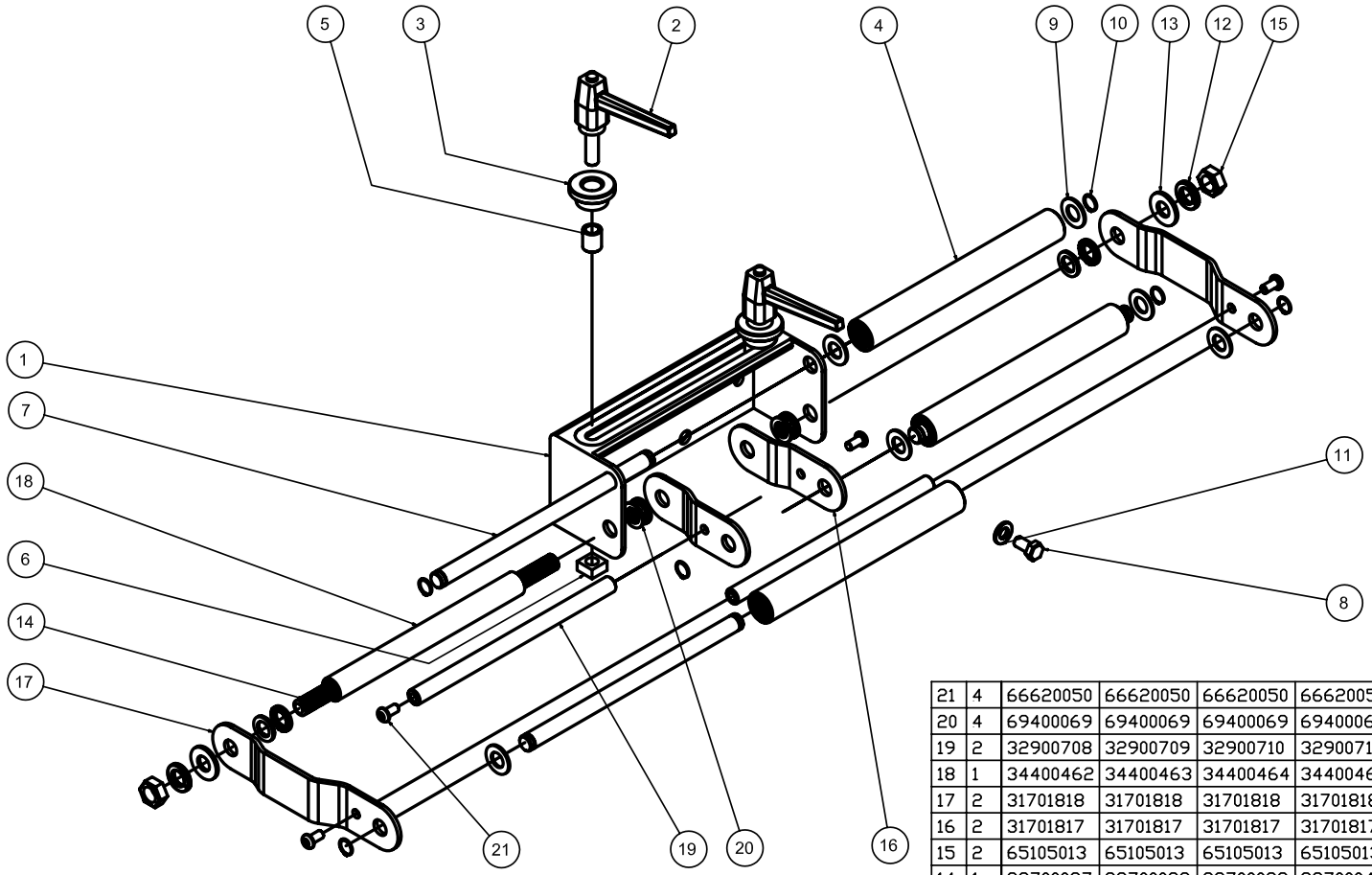

ITEM	QTY.	PART NO. 6' CASCADE BRACKET	PART NO. 8' CASCADE BRACKET	PART NO. 12' CASCADE BRACKET	PART NO. 18' CASCADE BRACKET	PART NO. 24' CASCADE BRACKET	DESCRIPTION
21	4	66620050	66620050	66620050	66620050	66620050	BHSCS 1/4-20 X 1/2
20	4	69400069	69400069	69400069	69400069	69400069	FRICTION WASHER (SET)
19	2	32900708	32900709	32900710	32900711	32900712	ROLLER SPACER
18	1	34400462	34400463	34400464	34400465	34400466	LOCKING SPACER
17	2	31701818	31701818	31701818	31701818	31701818	OUTER ROLLER SIDE PLATE
16	2	31701817	31701817	31701817	31701817	31701817	CENTER ROLLER SIDE PLATE
15	2	65105013	65105013	65105013	65105013	65105013	HEX NUT 1/2-13
14	1	33700037	33700038	33700039	33700040	33700041	THREADED STUD
13	2	61200034	61200034	61200034	61200034	61200034	FLAT WASHER 1/2"
12	2	61300050	61300050	61300050	61300050	61300050	LOCKWASHER 1/2"
11	2	61200022	61200022	61200022	61200022	61200022	FLAT WASHER 5/16
10	6	60910050	60910050	60910050	60910050	60910050	RETAINING RING
9	6	64520026	64520026	64520026	64520026	64520026	THRUST WASHER
8	2	65831063	65831063	65831063	65831063	65831063	HEX BOLT 5/16-18 X 5/8
7	3	32900715	32900716	32900717	32900718	32900719	ROLLER SHAFT
6	2	65500014	65500014	65500014	65500014	65500014	SQUARE NUT
5	2	33900237	33900237	33900237	33900237	33900237	ROLLER SLEEVE
4	3	22900108	22900109	22900110	22900111	22900112	ROLLER ASSEMBLY
3	2	34200007	34200007	34200007	34200007	34200007	STOCK GUIDE ROLLER
2	2	36600020	36600020	36600020	36600020	36600020	HANDLE
1	1	31900562	31900563	31900564	31900565	31900566	GUIDE SUPPORT BRACKET

100 Series Cascade Assembly Exploded View and Parts List

200 Series Servo Feed Exploded View

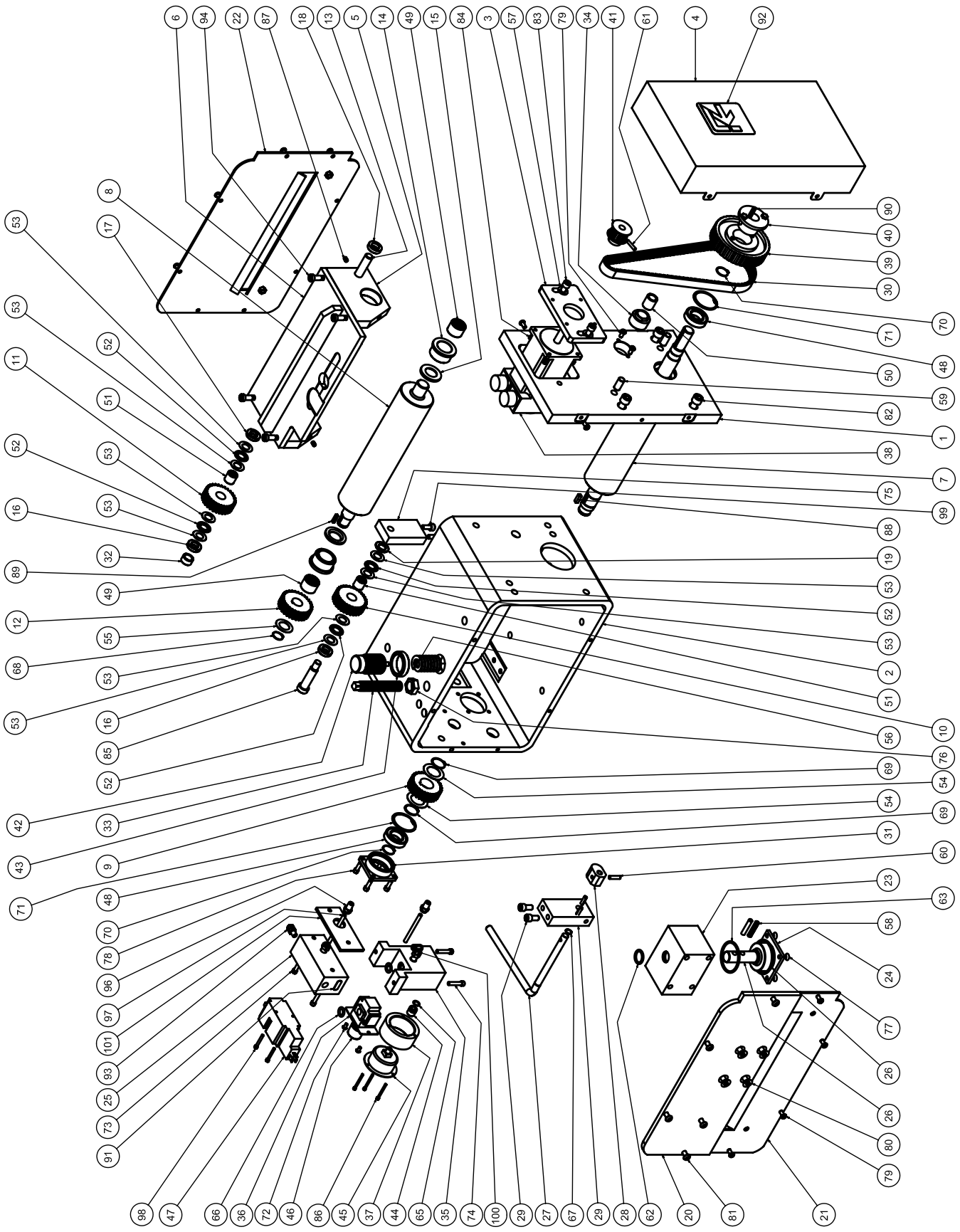

200 Series Servo Feed Parts List

ITEM	QTY.	PART NO. 208T , TX	PART NO. 212T , TX	PART NO. 218T , TX	PART NO. 224T , TX	DESCRIPTION
REF.	1	10900506	10900507	10900508	10900509	CASCADE ASSEMBLY (SEE SEPARATE EXPLODED DRAWING)
101	1	34100338	34100338	34100338	34100338	MAINFOLD SPACER PLATE
100	1	67100157	67100157	67100157	67100157	90° SWIVEL CONNECTOR
99	2	65931075	65931075	65931075	65931075	SHCS 5/16-18 X 3/4
98	2	65908125	65908125	65908125	65908125	SHCS #8-32 X 1 1/4
97	1	64230010	64230010	64230010	64230010	BLACK POLY TUBING
96	3	67100121	67100121	67100121	67100121	MALE CONNECTOR
95	2	----------	----------	----------	65836175	HEX BOLT 3/8-16 X 1 3/4
	2	65936075	65936075	65936075	----------	SHCS 3/8-16 X 3/4
94	4	66131075	66131075	66131075	66131075	SHOULDER SCREW
93	1	67200001	67200001	67200001	67200001	MUFFLER
92	1	39900246	39900246	39900246	39900246	RAPID AIR LOGO
91	1	39900175	39900175	39900175	39900175	"INLET" LABEL
90	1	36800013	36800013	36800013	36800013	KEY
89	1	36800006	36800006	36800006	36800006	KEY
88	1	36800021	36800021	36800021	36800021	KEY
87	3	66220037	66220037	66220037	66220037	SET SCREW
86	3	65906150	65906150	65906150	65906150	SHCS #6-32 X 1 1/2
85	1	66162200	66162200	66162200	66162200	SHOULDER SCREW
84	4	65912075	65912075	65912075	65912075	SHCS #10-32 X 3/4
83	2	65936125	65936125	65936125	65936125	SHCS 3/8-16 X 1
82	4	65953100	65953100	65953100	65953100	SHCS 1/2-13 X 1
81	---	66631075 (5)	66631075 (5)	66631075 (6)	66631075 (6)	BHSCS 5/16-18 X 3/4
80	---	66536100 (4)	66536100 (4)	66536100 (8)	66536100 (8)	FHSCS 3/8-16 X 1
79	---	66620050 (16)	66620050 (16)	66620050 (20)	66620050 (20)	BHSCS 1/4-20 X 1/2
78	4	65920075	65920075	65920075	65920075	SHCS 1/4-20 X 3/4
77	---	66520062 (4)	66520062 (4)	66520062 (8)	66520062 (8)	FHSCS 1/4-20 X 5/8
76	1	65117516	65117516	65117516	65117516	HEX JAM NUT 3/4-16
75	1	31702115	31702115	31702115	31702115	GEAR SUPPORT PLATE
74	2	65920125	65920125	65920125	65920125	SHCS 1/4-20 X 1 1/4
73	2	65920225	65920225	65920225	65920225	SHCS 1/4-20 X 2 1/4 (AIR PILOT RELEASE & AIR DOWN)
		65920150	65920150	65920150	65920150	SHCS 1/4-20 X 1 1/2 (AIR PILOT RELEASE ONLY)
72	2	66612037	66612037	66612037	66612037	BHSCS #10-32 X 3/8
71	2	60900185	60900185	60900185	60900185	RETAINING RING
70	2	60910098	60910098	60910098	60910098	RETAINING RING
69	2	60910112	60910112	60910112	60910112	RETAINING RING
68	1	60910087	60910087	60910087	60910087	RETAINING RING
67	1	60910050	60910050	60910050	60910050	RETAINING RING
66	2	60108206	60108206	60108206	60108206	"O" RING
65	1	60108014	60108014	60108014	60108014	"O" RING
64	1	60108230	60108230	60108230	60108230	"O" RING
63	1	60108228	60108228	60108228	60108228	"O" RING
62	1	60108212	60108212	60108212	60108212	"O" RING
61	1	62500001	62500001	62500001	62500001	TAPER PIN
60	3	62425100	62425100	62425100	62425100	ROLL PIN 1/4 X 1
59	2	62350100	62350100	62350100	62350100	DOWEL PIN 1/2 X 1
58	2	62137150	62137150	62137150	62137150	SPIRAL PIN
57	2	61200026	61200026	61200026	61200026	FLAT WASHER
56	1	37500159	37500159	37500159	37500159	SPRING
55	1	64520022	64520022	64520022	64520022	THRUST WASHER
54	2	64520025	64520025	64520025	64520025	THRUST WASHER
53	8	64520008	64520008	64520008	64520008	THRUST WASHER
52	4	64510002	64510002	64510002	64510002	THRUST BEARING
51	2	64500057	64500057	64500057	64500057	NEEDLE BEARING
50	1	64100046	64100046	64100046	64100046	BRONZE BUSHING
49	2	64500066	64500066	64500066	64500066	NEEDLE BEARING
48	2	64600049	64600049	64600049	64600049	BALL BEARING
47	1	69200027	69200027	69200027	69200027	VALVE
46	1	68000024	68000024	68000024	68000024	REGULATOR
45	1	68000026	68000026	68000026	68000026	AIR GAUGE
44	1	36300004	36300004	36300004	36300004	GAUGE FITTING
43	1	36200031	36200031	36200031	36200031	ADJUSTING SCREW LOCKNUT
42	1	36100078	36100078	36100078	36100078	ADJUSTING SCREW
41	1	32500001	32500001	32500001	32500001	TIMING BELT PULLEY
40	1	32500036	32500036	32500036	32500036	BUSHING FOR 32500029
39	1	32500029	32500029	32500029	32500029	ALUMINUM PULLEY
38	1	69000024 T	69000024 T	69000025 T	69000025 T	MOTOR
		69000027 TX	69000027 TX	69000027 TX	69000027 TX	
37	1	34100236	34100236	34100236	34100236	GAUGE SPACER
36	1	31702137	31702137	31702137	31702137	REGULATOR MOUNTING PLATE
35	1	31702113	31702113	31702113	31702113	GAUGE & REGULATOR MOUNTING PLATE
34	1	32900858	32900858	32900858	32900858	ECCENTRIC SHAFT
33	1	36100104	36100104	36100104	36100104	POSITIVE STOP SCREW
32	1	64100075	64100075	64100075	64100075	BRONZE BUSHING
31	1	30100290	30100290	30100290	30100290	BEARING HOUSING
30	1	32500035	32500035	32500035	32500035	TIMING BELT
29	1	31702111	31702111	31702111	31702111	CAM PIVOT PLATE
28	1	36500045	36500045	36500045	36500045	CAM
27	1	36600036	36600036	36600036	36600036	CAM HANDLE
26	---	35500231 (1)	35500231 (1)	35500231 (2)	35500231 (2)	PISTON
25	1	31702112	31702112	31702112	31702112	MANIFOLD PLATE (AIR PILOT RELEASE & AIR DOWN)
	1	31702110	31702110	31702110	31702110	MANIFOLD PLATE (AIR PILOT RELEASE ONLY)
24	---	31400550 (1)	31400550 (1)	31400550 (2)	31400550 (2)	PISTON COVER
23	1	----------	----------	30100292	30100292	PISTON HOUSING
	1	30100289	30100289	30100289	30100289	
22	1	21900258	21900256	21900264	21900261	REAR GUARD
21	1	21900257	21900255	21900263	21900260	LOWER GUARD
20	1	31702117	31702109	31702129	31702124	PISTON HOUSING MOUNTING PLATE
19	1	34100325	34100325	34100325	34100325	SPACER
18	1	34100324	34100324	34100324	34100324	SPACER
17	1	34100323	34100323	34100323	34100323	SPACER
16	1	34100326	34100326	34100326	34100326	SPACER (W/0 UPPER DRIVEN ROLL OPTION)
	2	34100322	34100322	34100322	34100322	SPACER (WITH UPPER DRIVEN ROLL OPTION)
15	2	34100321	34100321	34100321	34100321	SPACER
14	2	33900265	33900265	33900265	33900265	BEARING SLEEVE
13	1	32900859	32900857	32900861	32900860	PIVOT SHAFT
12	1	32600234	32600234	32600234	32600234	UPPER ROLLER SPUR GEAR
11	1	32600233	32600233	32600233	32600233	UPPER IDLER SPUR GEAR
10	1	32600232	32600232	32600232	32600232	LOWER IDLER SPUR GEAR
9	1	32600235	32600235	32600235	32600235	LOWER ROLLER SPUR GEAR
8	1	34200385	34200383	34200389	34200387	UPPER ROLLER
7	1	34200384	34200382	34200388	34200386	LOWER ROLLER
6	1	31702116	21900254	21900262	21900259	ROLLER TOP PLATE
5	2	31702106	31702106	31702106	31702106	ROLLER SIDE PLATE
4	1	30100287	30100287	30100287	30100287	BELT COVER HOUSING
3	1	31702105	31702105	31702105	31702105	MOTOR MOUNTING PLATE
2	1	30100290	30100288	30100293	20100008	ROLLER HOUSING
1	1	31702104	31702104	31702104	31702104	SIDE PLATE
ITEM	QTY.	PART NO. 208T , TX	PART NO. 212T , TX	PART NO. 218T , TX	PART NO. 224T , TX	DESCRIPTION

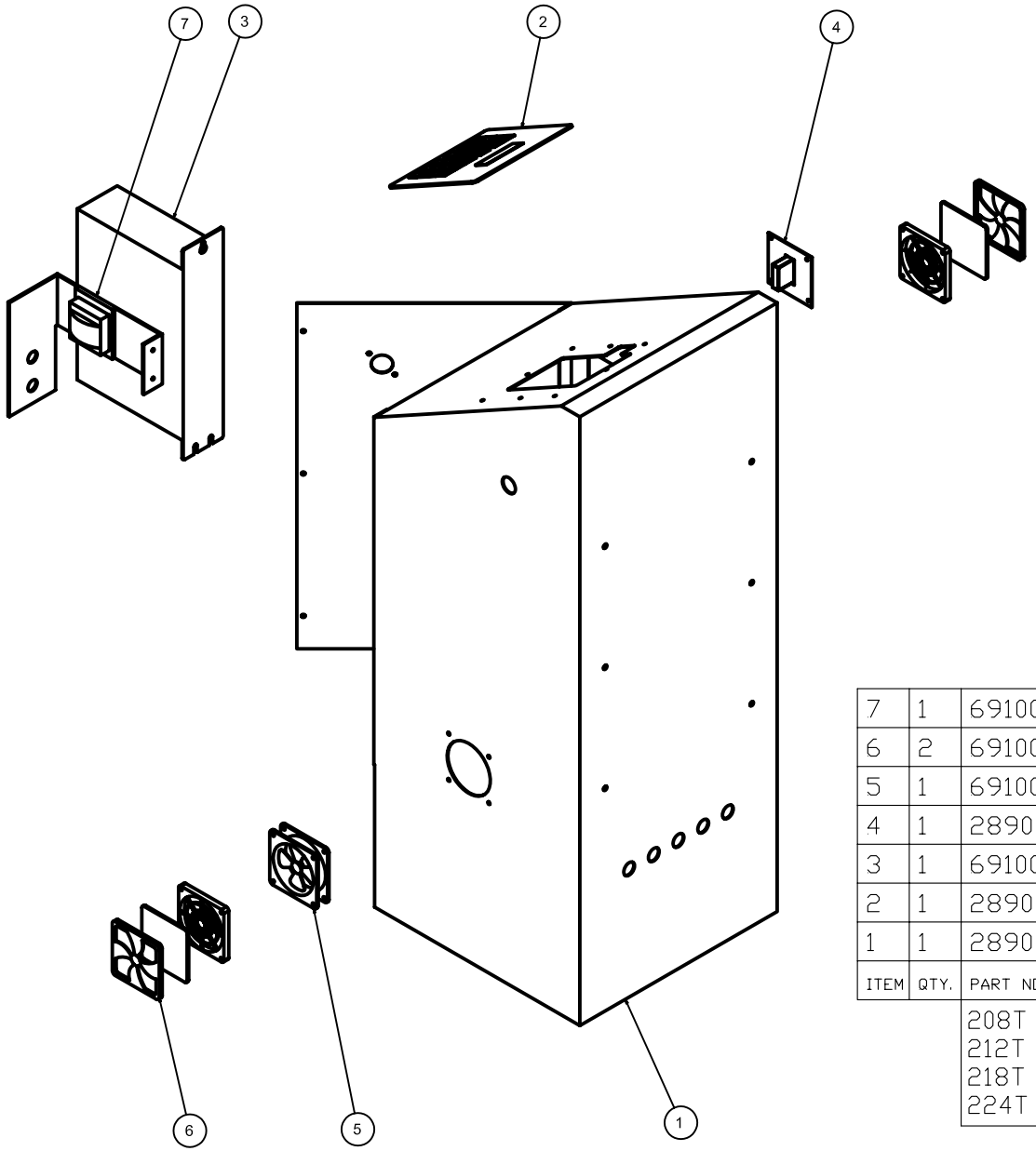

ITEM	QTY.	PART NO.	DESCRIPTION
7	1	69100031	POWER SUPPLY
6	2	69100643	FAN FILTER ASSEMBLY
5	1	69100642	FAN ASSEMBLY
4	1	28900238	POWER ON/OFF ASSEMBLY
3	1	69100098	DRIVE
2	1	28900246	KEYPAD ASSEMBLY
1	1	28900245	CABINET ASSEMBLY

208T , TX
212T , TX
218T , TX
224T , TX

200 Series Control Cabinet Exploded View and Parts List

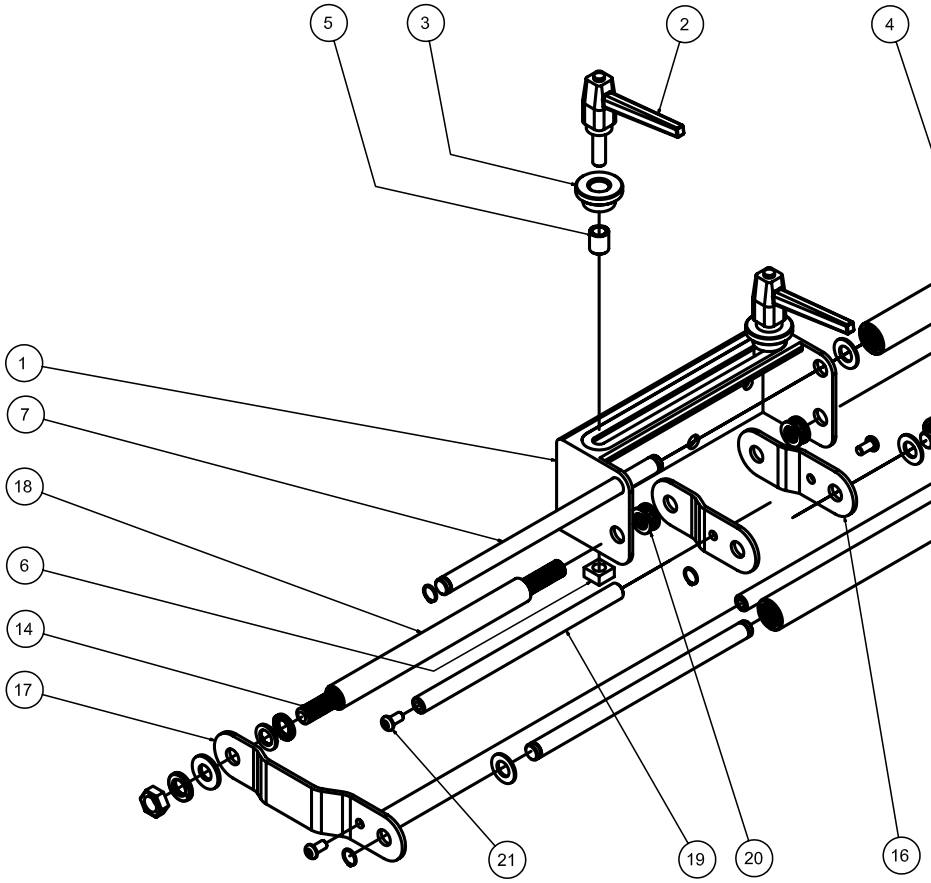

ITEM	QTY.	PART NO. 6' CASCADE BRACKET	PART NO. 8' CASCADE BRACKET	PART NO. 12' CASCADE BRACKET	PART NO. 18' CASCADE BRACKET	PART NO. 24' CASCADE BRACKET	DESCRIPTION
21	4	66620050	66620050	66620050	66620050	66620050	BHSCS 1/4-20 X 1/2
20	4	69400069	69400069	69400069	69400069	69400069	FRICTION WASHER (SET)
19	2	32900708	32900709	32900710	32900711	32900712	ROLLER SPACER
18	1	34400462	34400463	34400464	34400465	34400466	LOCKING SPACER
17	2	31701818	31701818	31701818	31701818	31701818	OUTER ROLLER SIDE PLATE
16	2	31701817	31701817	31701817	31701817	31701817	CENTER ROLLER SIDE PLATE
15	2	65105013	65105013	65105013	65105013	65105013	HEX NUT 1/2-13
14	1	33700037	33700038	33700039	33700040	33700041	THREADED STUD
13	2	61200034	61200034	61200034	61200034	61200034	FLAT WASHER 1/2"
12	2	61300050	61300050	61300050	61300050	61300050	LOCKWASHER 1/2"
11	2	61200022	61200022	61200022	61200022	61200022	FLAT WASHER 5/16
10	6	60910050	60910050	60910050	60910050	60910050	RETAINING RING
9	6	64520026	64520026	64520026	64520026	64520026	THRUST WASHER
8	2	65831063	65831063	65831063	65831063	65831063	HEX BOLT 5/16-18 X 5/8
7	3	32900715	32900716	32900717	32900718	32900719	ROLLER SHAFT
6	2	65500014	65500014	65500014	65500014	65500014	SQUARE NUT
5	2	33900237	33900237	33900237	33900237	33900237	ROLLER SLEEVE
4	3	22900108	22900109	22900110	22900111	22900112	ROLLER ASSEMBLY
3	2	34200007	34200007	34200007	34200007	34200007	STOCK GUIDE ROLLER
2	2	36600020	36600020	36600020	36600020	36600020	HANDLE
1	1	31900562	31900563	31900564	31900565	31900566	GUIDE SUPPORT BRACKET

200 Series Cascade Assembly Exploded View and Parts List